Build a Robot!

ROBORISE-IT!
ROBOTIC EDUCATION

Basic version

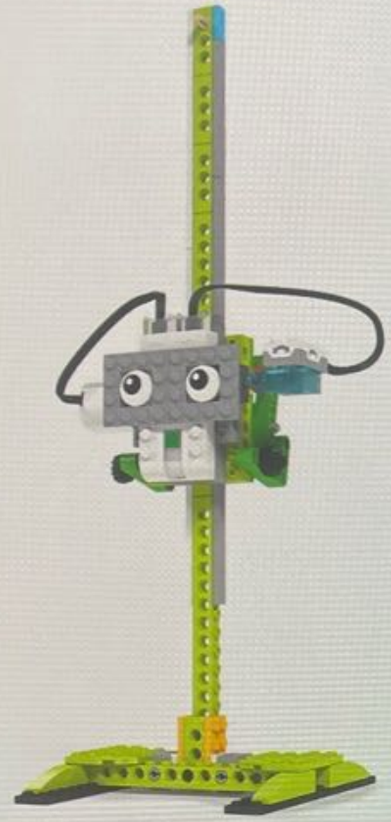

0

24

File Lesson Window Language

ROBORISE-IT!
ROBOTIC EDUCATION

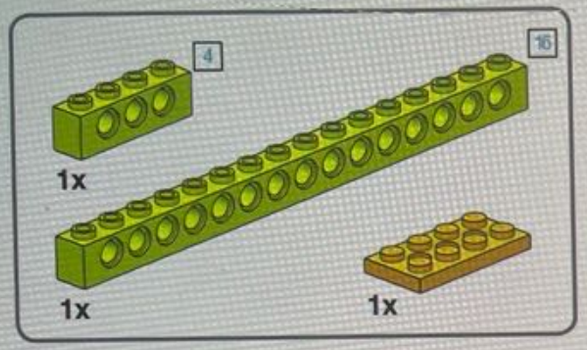

1

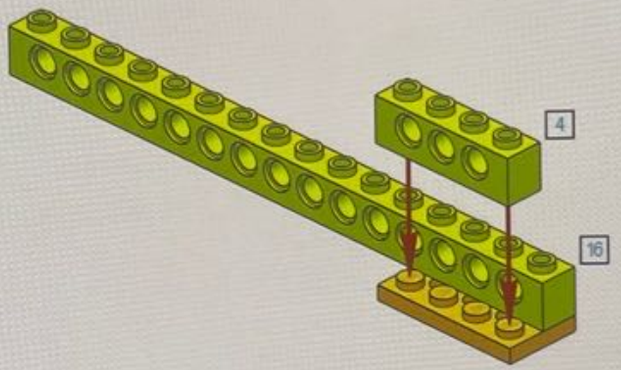

1/43

0

25

SAMSUNG

File Lesson Window Language

ROBORISE-IT!
ROBOTIC EDUCATION

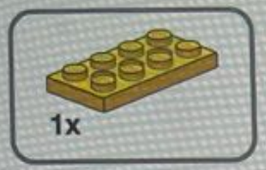

2

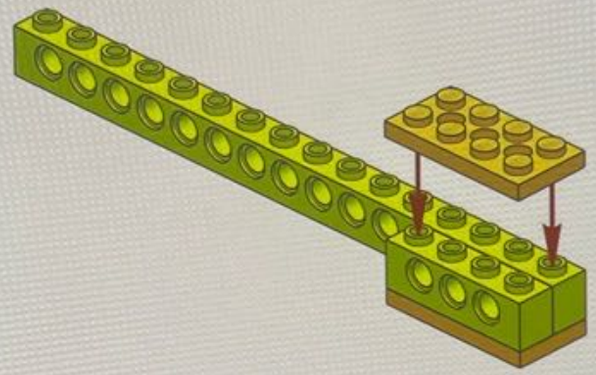

SAMSUNG

File Lesson Window Language

ROBORISE-IT!
ROBOTIC EDUCATION

4x

3

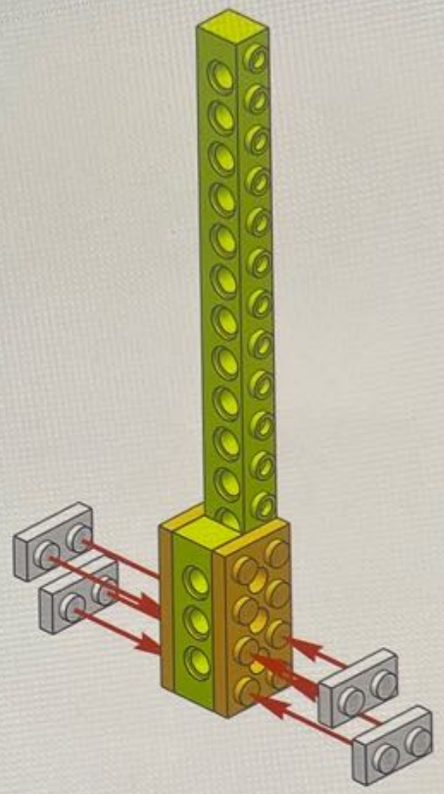

3/43

0

27

ROBORISE-IT!
ROBOTIC EDUCATION

4x

4

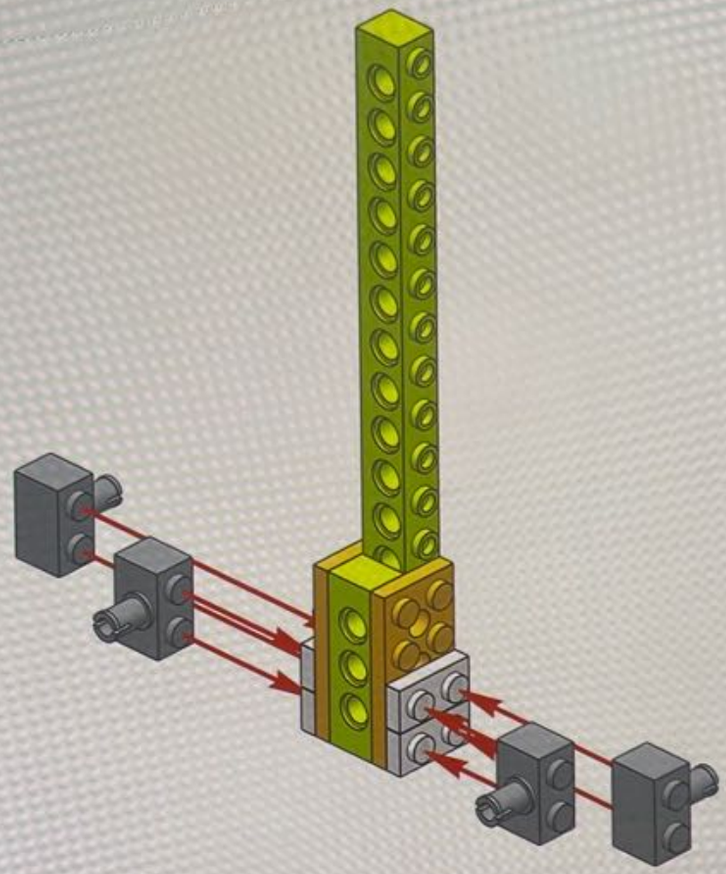

4/43

0

28

ROBORISE-IT!
ROBOTIC EDUCATION

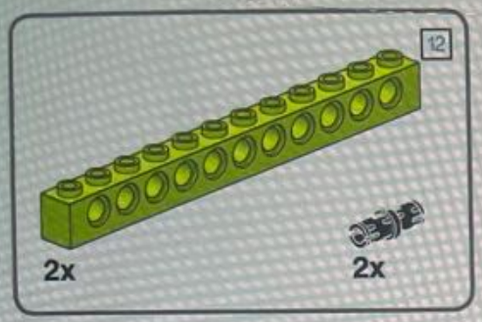

5

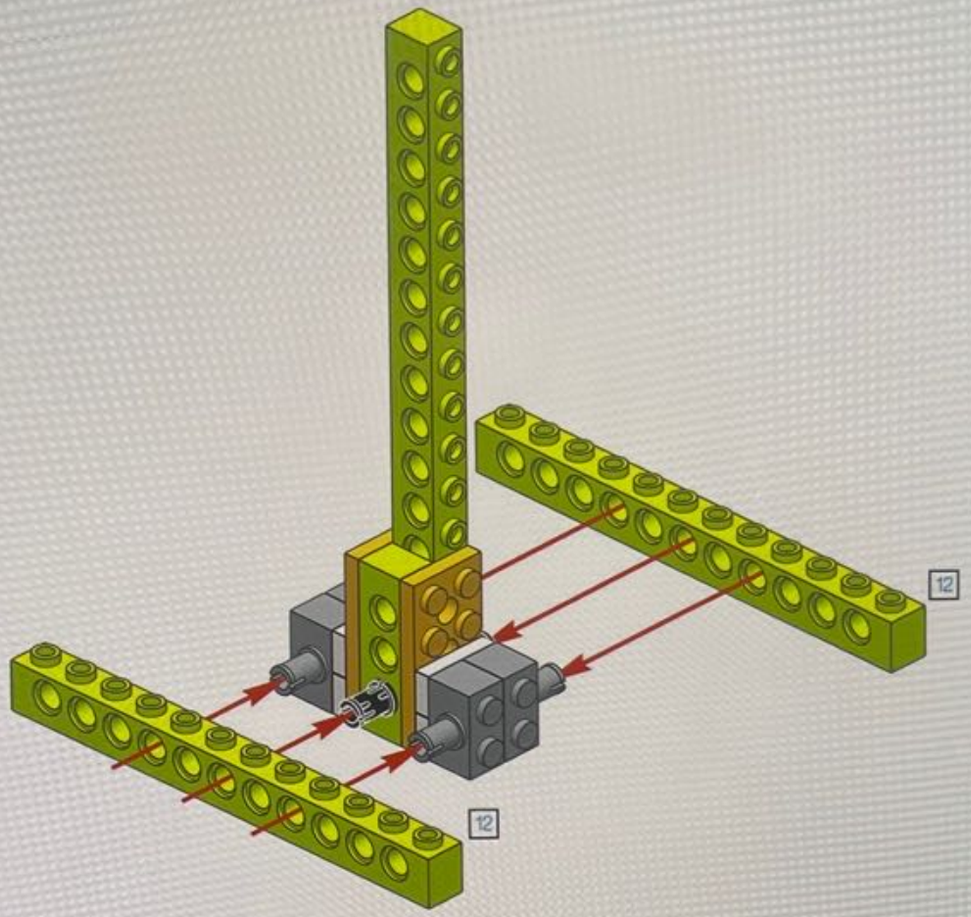

5/43

0

29

ROBORISE-IT!
ROBOTIC EDUCATION

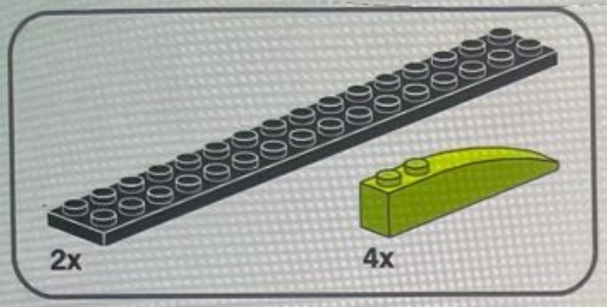

6

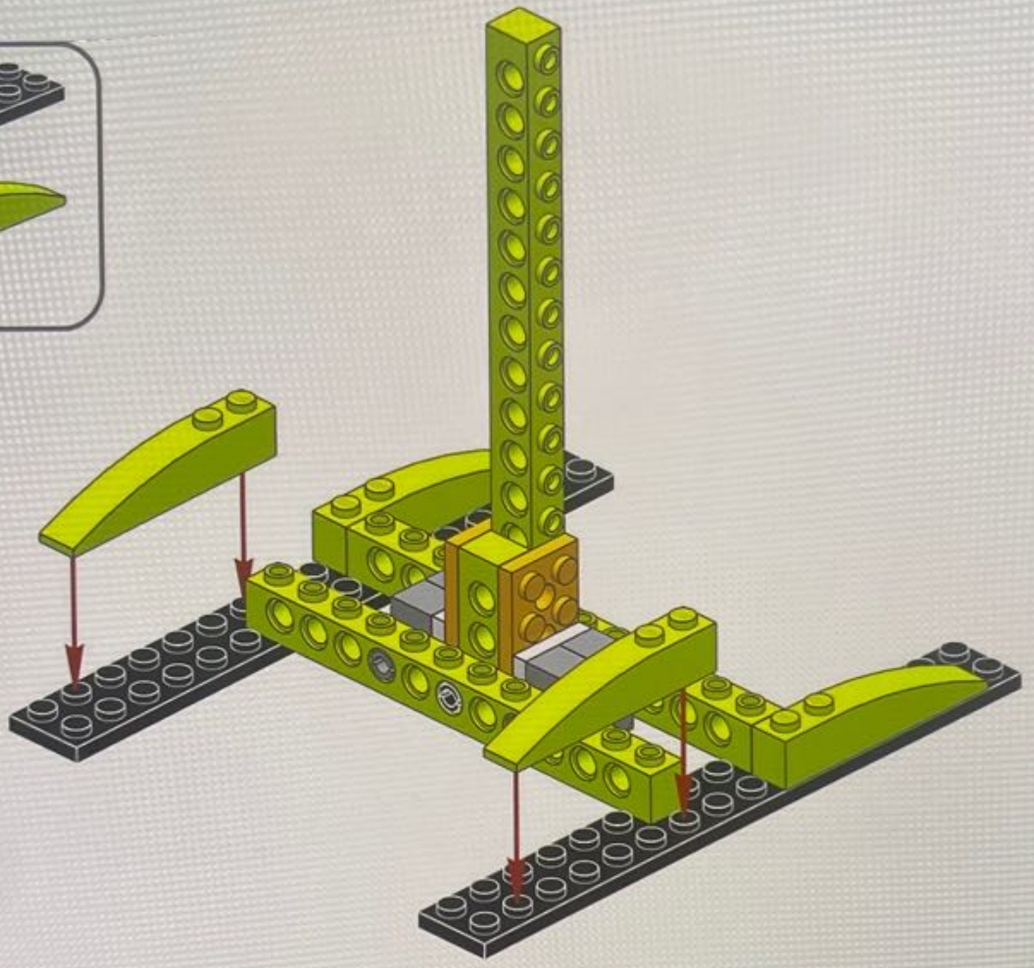

6/43

0

30

File Lesson Window Language

ROBORISE-IT!
ROBOTIC EDUCATION

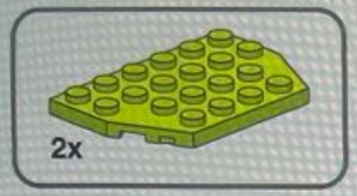

7

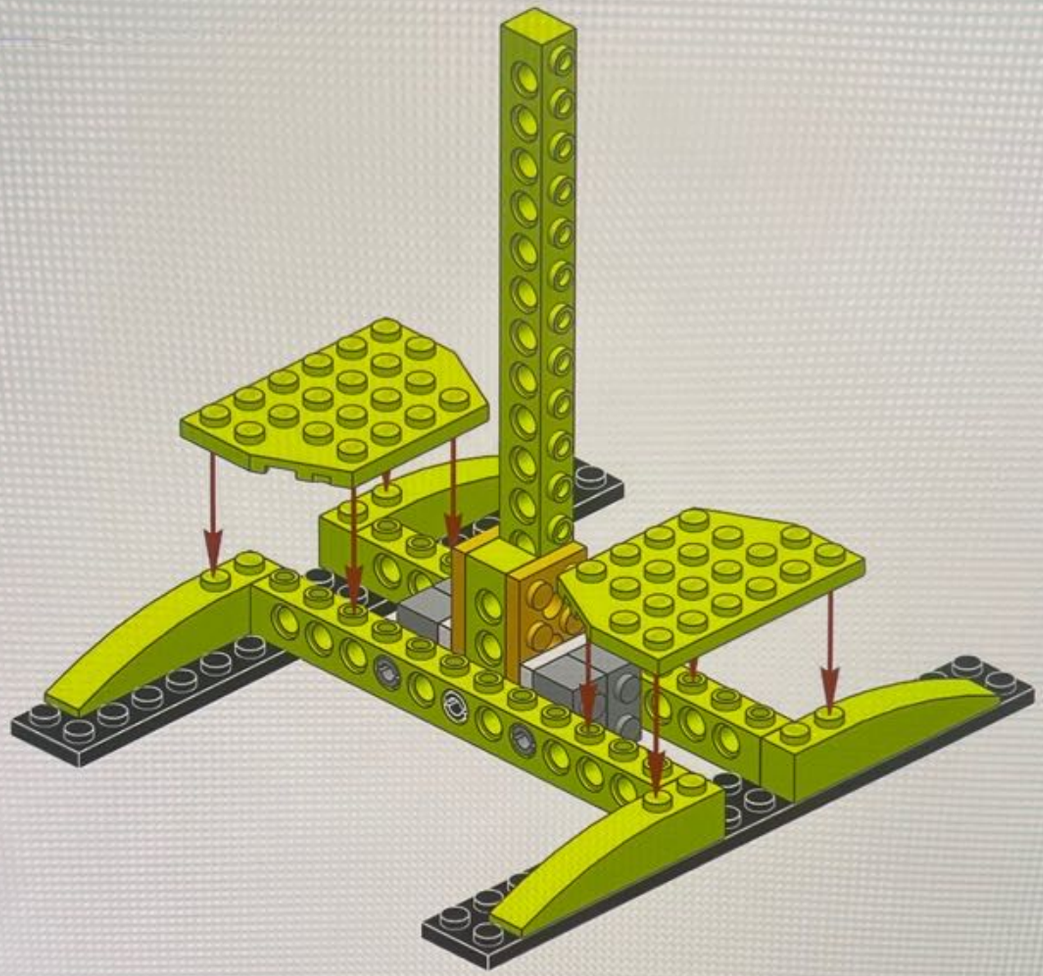

7/43

0

31

SAMSUNG

ROBORISE-IT!
ROBOTIC EDUCATION

8

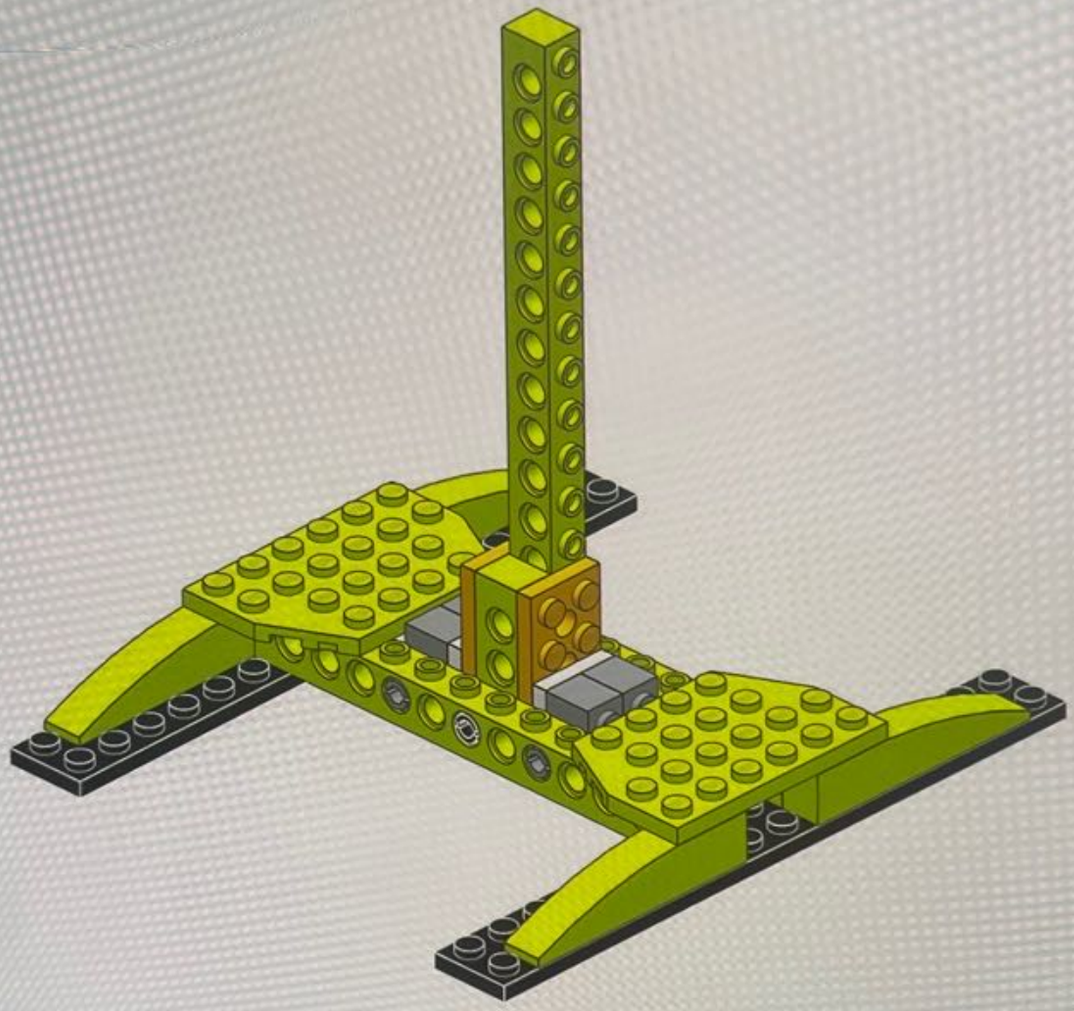

8/43

0

32

ROBORISE-IT!
ROBOTIC EDUCATION

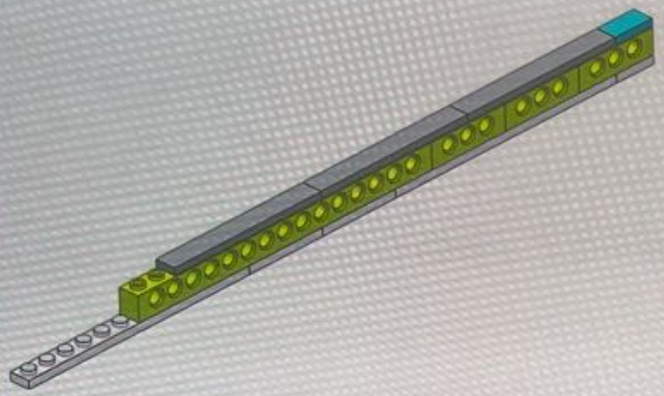

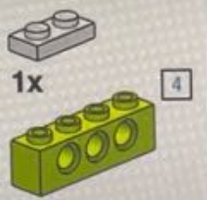

9

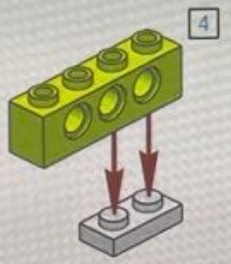

9/43

0

33

SAMSUNG

ROBORISE-IT!
ROBOTIC EDUCATION

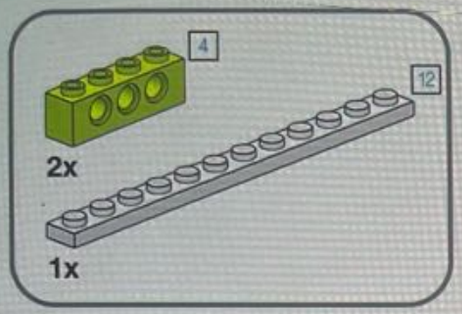

10

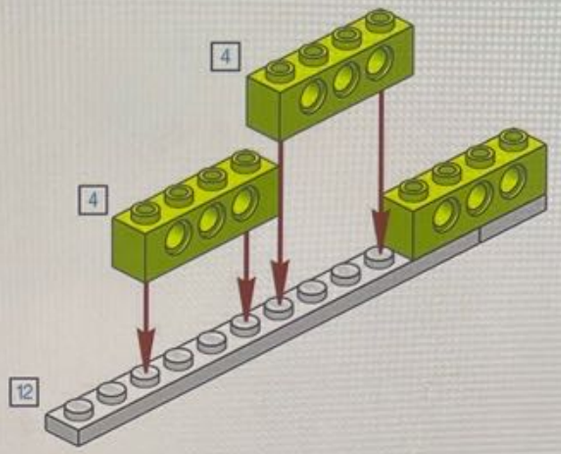

SAMSUNG

ROBORISE-IT!
ROBOTIC EDUCATION

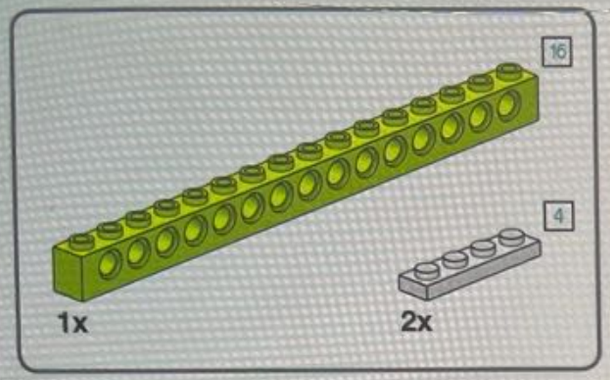

11

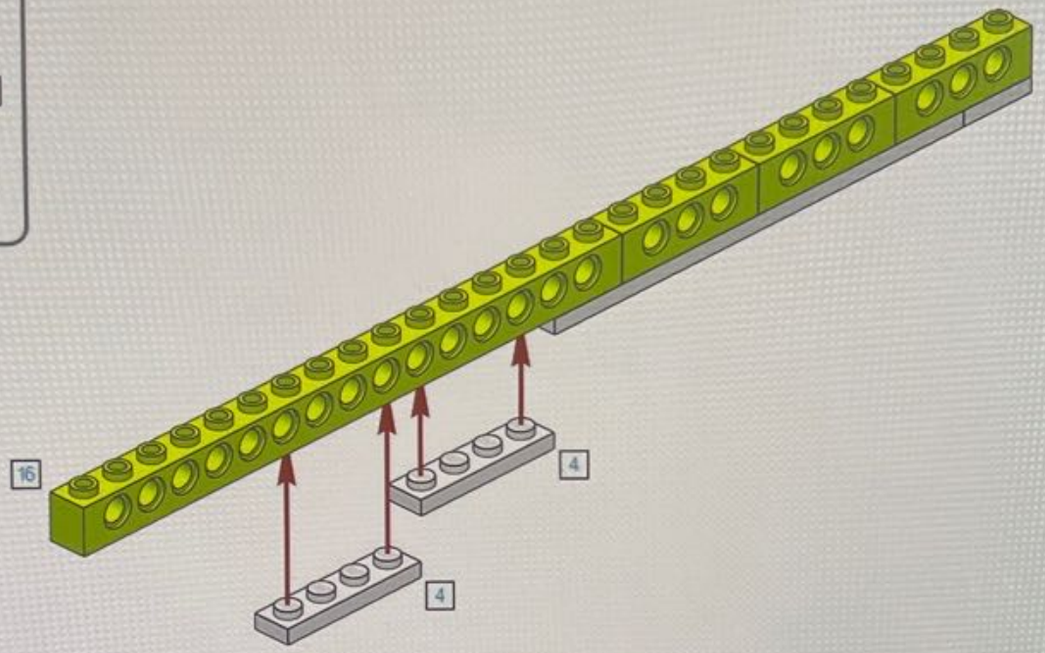

11/43

0

35

ROBORISE-IT!
ROBOTIC EDUCATION

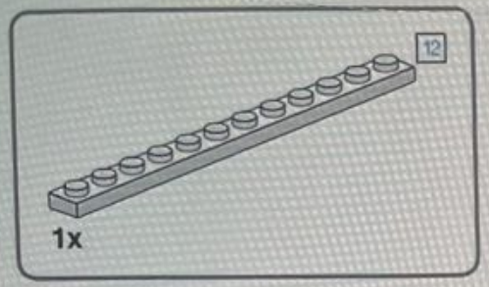

12

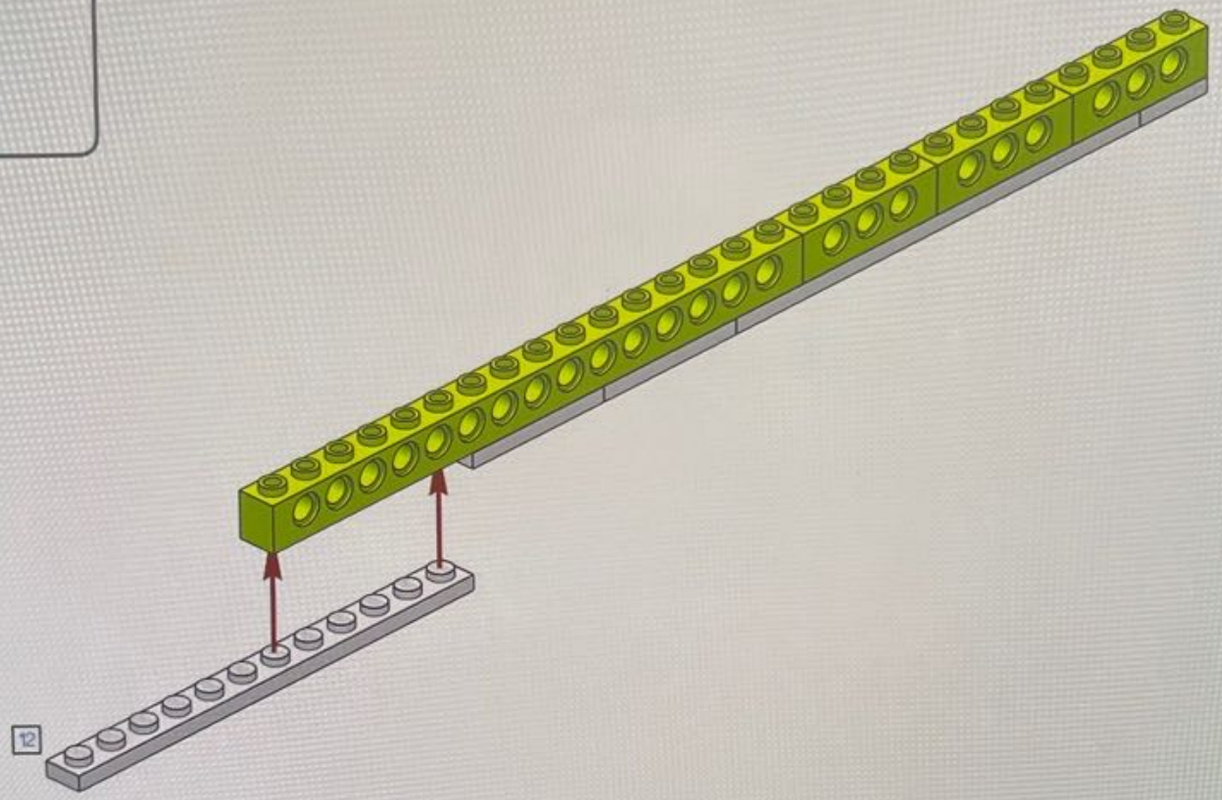

12/43

0

36

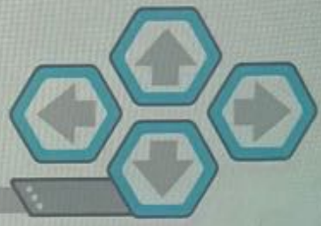

SAMSUNG

ROBORISE-IT!
ROBOTIC EDUCATION

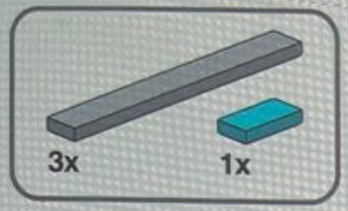

13

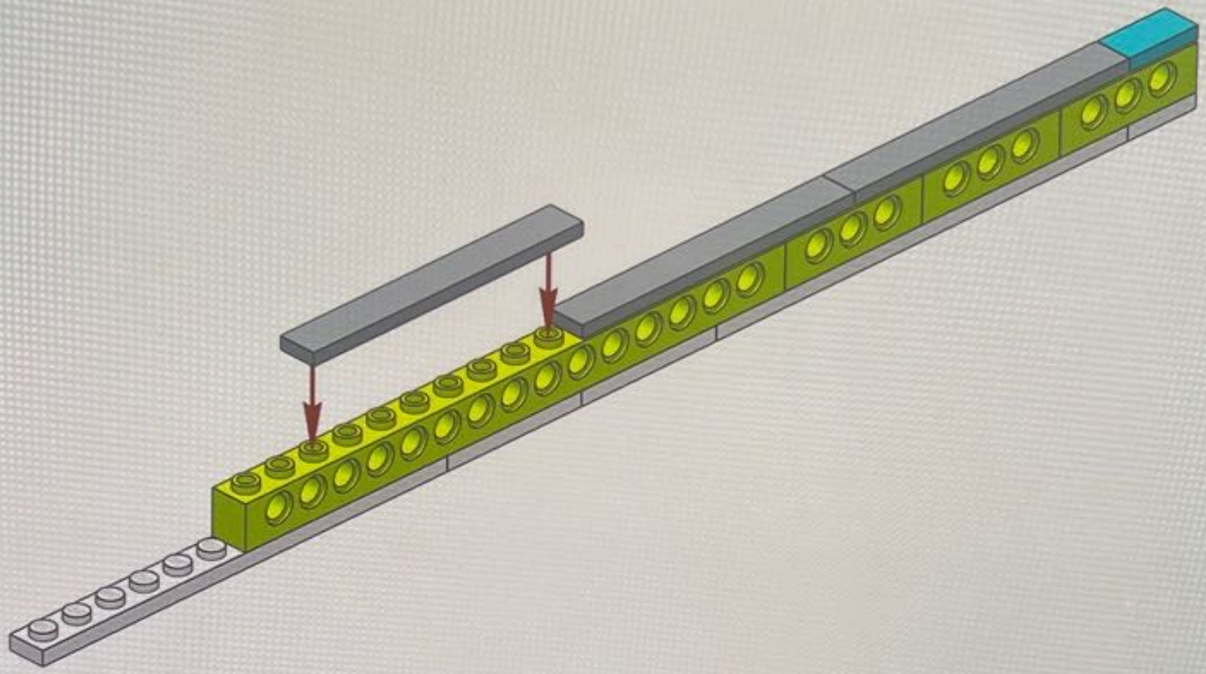

13/43

0

37

File Lesson Window Language

ROBORISE-IT!
ROBOTIC EDUCATION

14

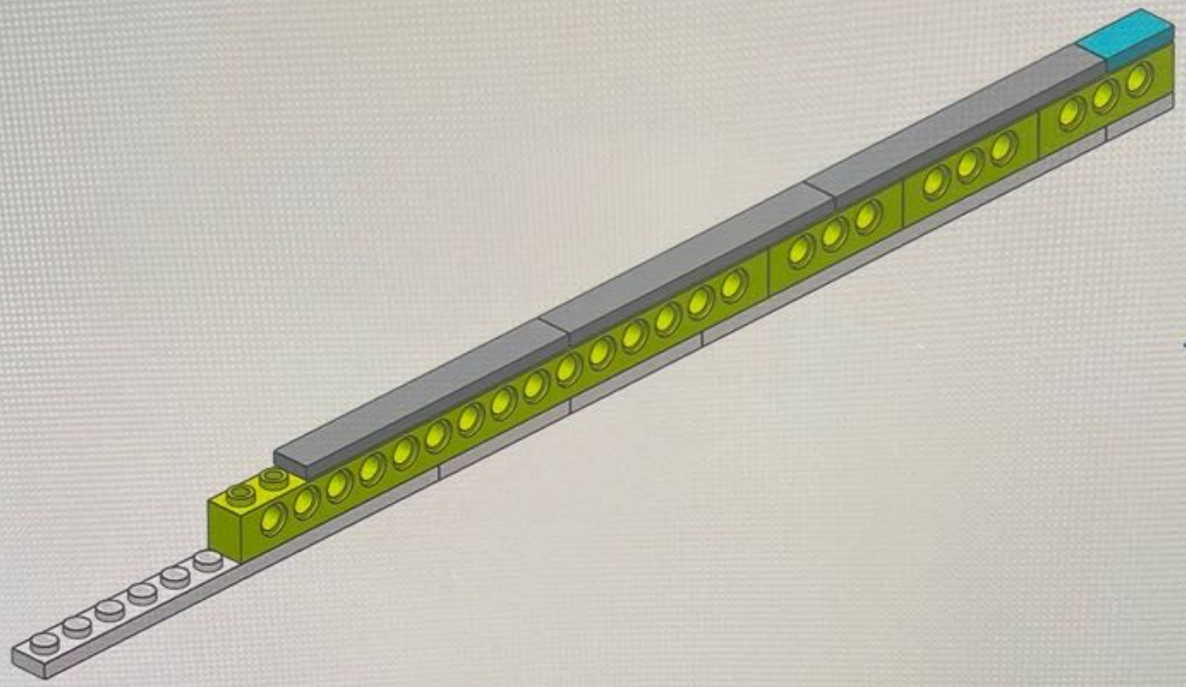

14/43

0

38

File Lesson Window Language

ROBORISE-IT!
ROBOTIC EDUCATION

15

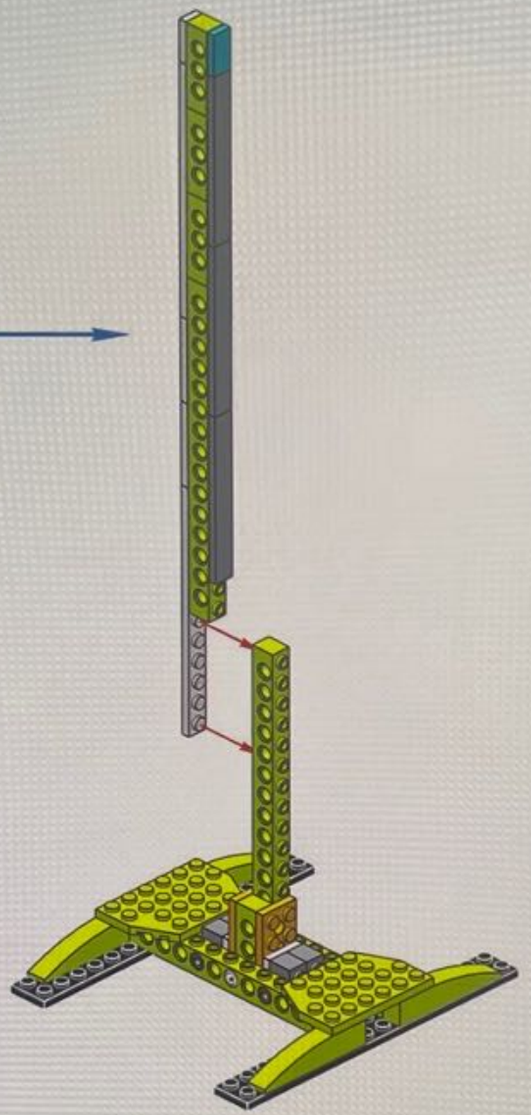

15/43

0

39

ROBORISE-IT!
ROBOTIC EDUCATION

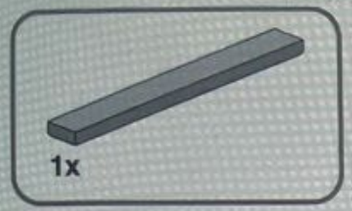

16

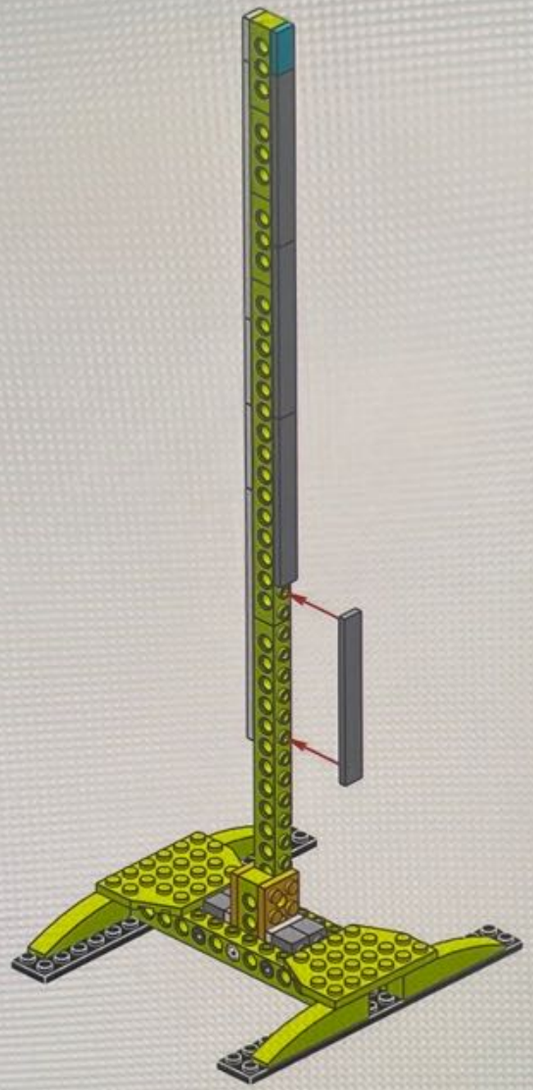

16/43

0

40

SAMSUNG

File Lesson Window Language

ROBORISE-IT!
ROBOTIC EDUCATION

17

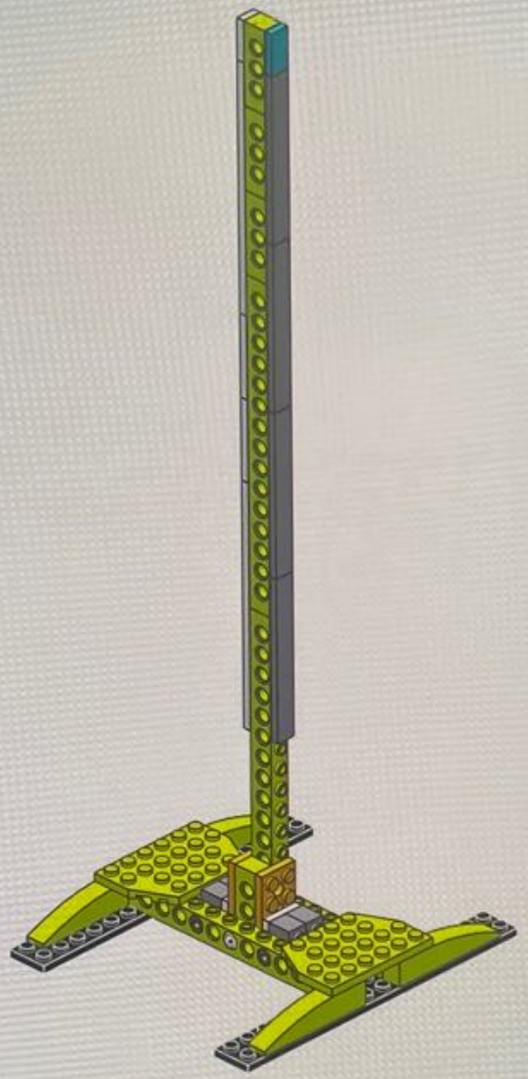

17/43

0

41

ROBORISE-IT!
ROBOTIC EDUCATION

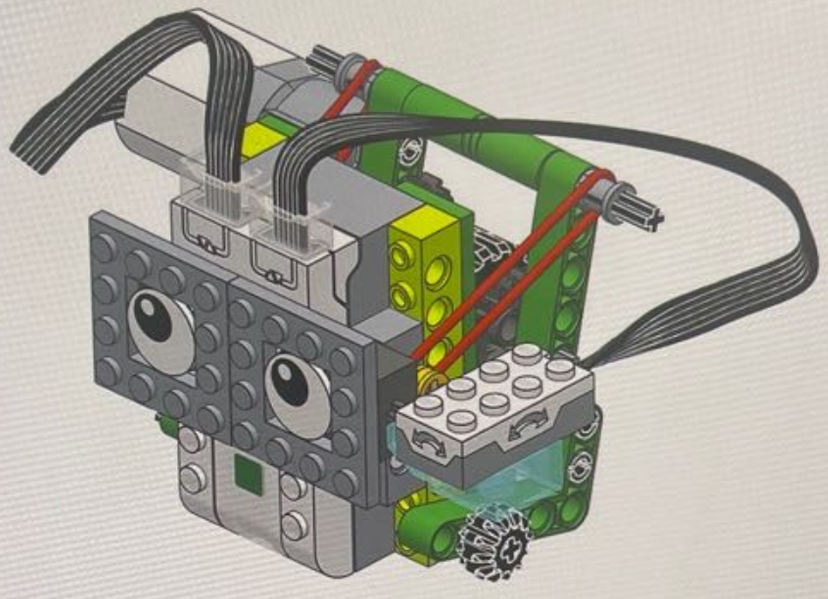

18/43

0

42

SAMSUNG

ROBORISE-IT!
ROBOTIC EDUCATION

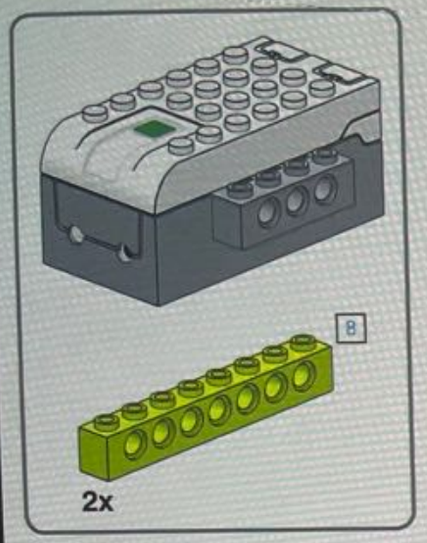

19

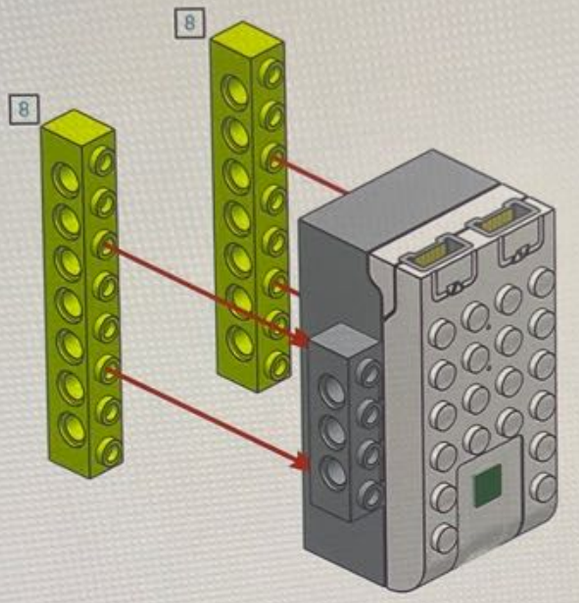

19/43

0

43

SAMSUNG

ROBORISE-IT!
ROBOTIC EDUCATION

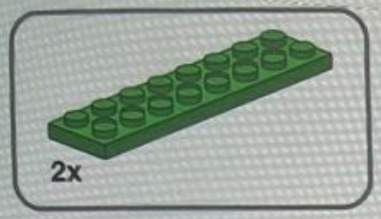

20

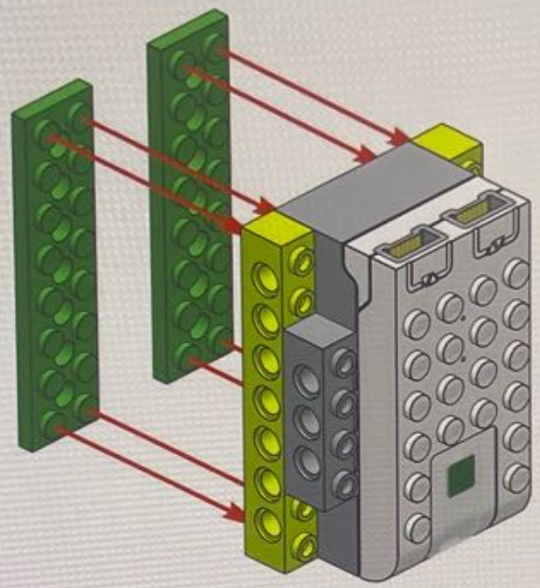

20/43

0

44

ROBORISE-IT!
ROBOTIC EDUCATION

2x 2x

21

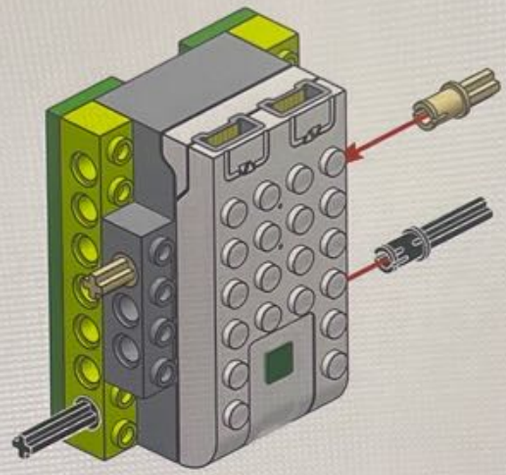

SAMSUNG

File Lessons Window Language

ROBORISE-IT!
ROBOTIC EDUCATION

2x

22

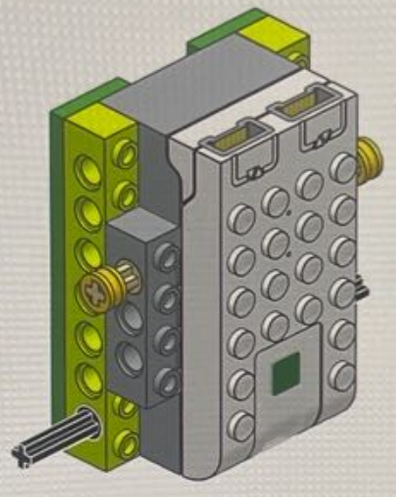

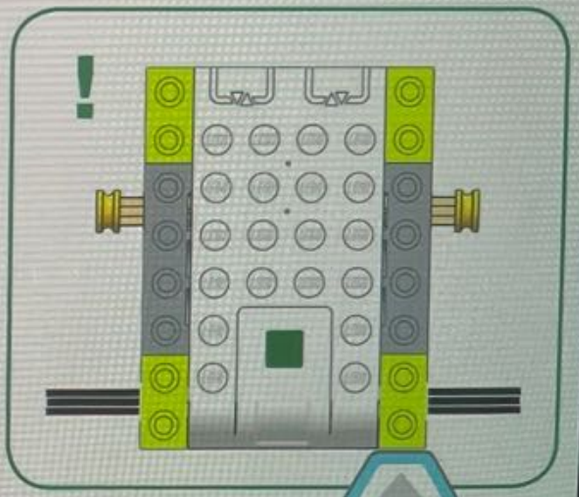

22/43

0

46

SAMSUNG

2x

1x

1x

1

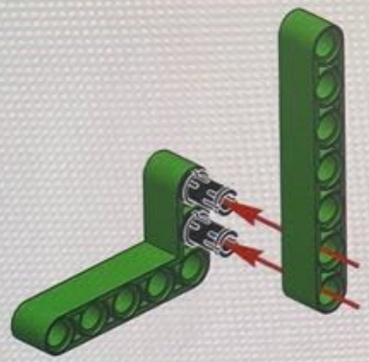

2x

2

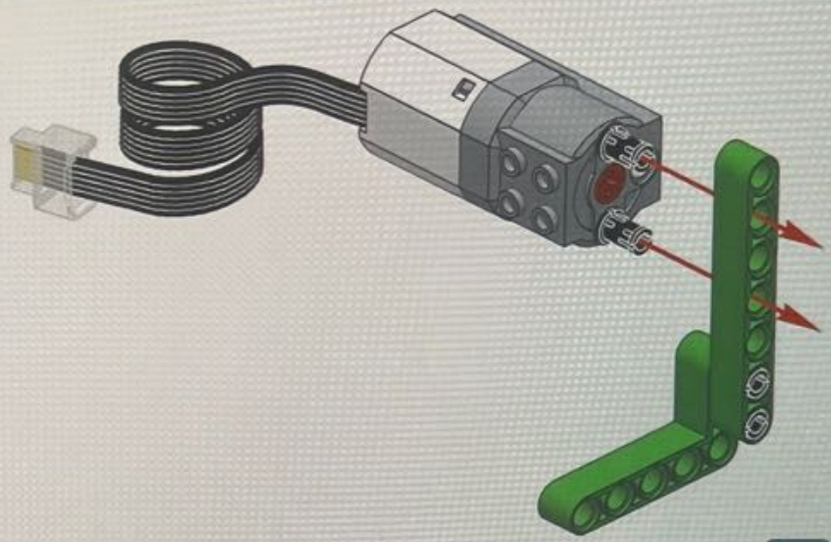

ROBORISE-IT!
ROBOTIC EDUCATION

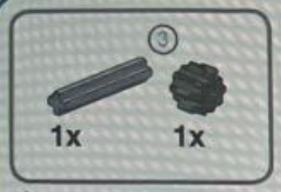

3

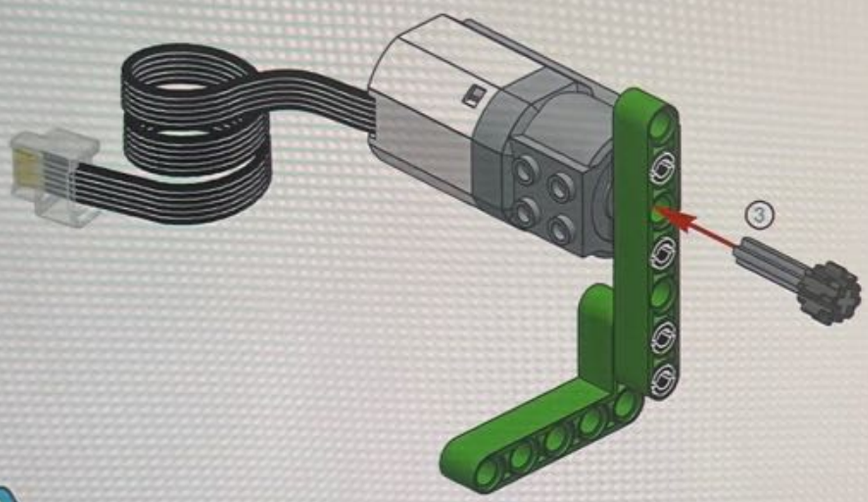

4

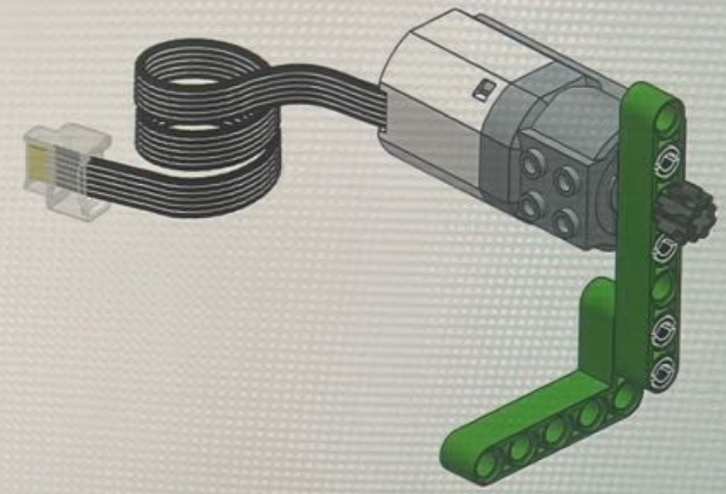

24/43

0

48

ROBORISE-IT!
ROBOTIC EDUCATION

25

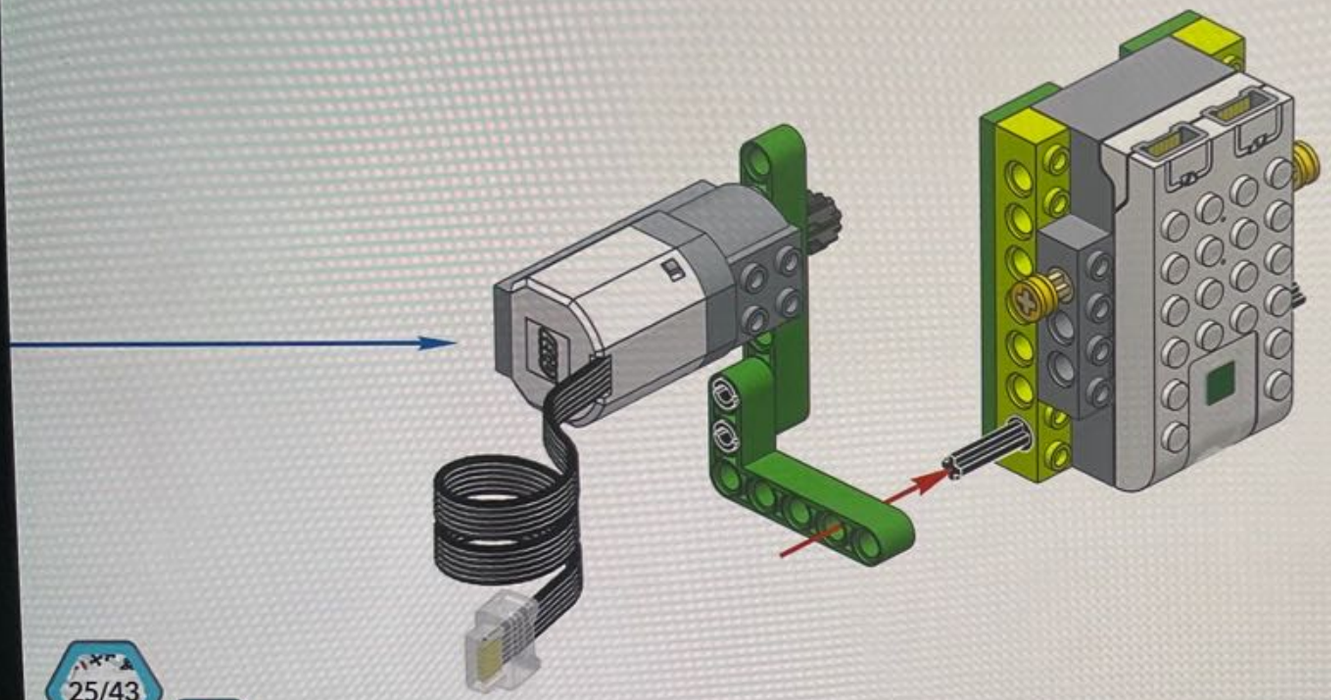

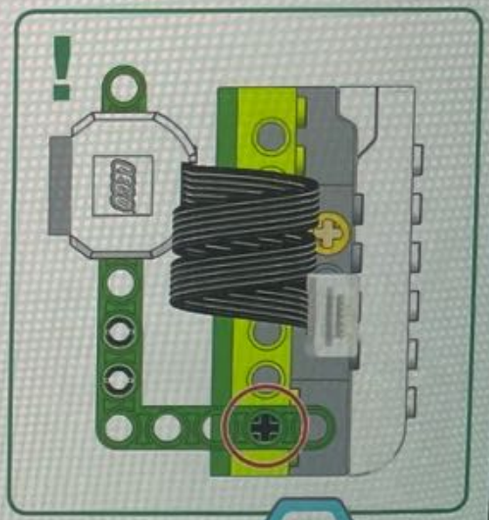

25/43

0

49

File Lesson Window Language

ROBORISE-IT!
ROBOTIC EDUCATION

1x

26

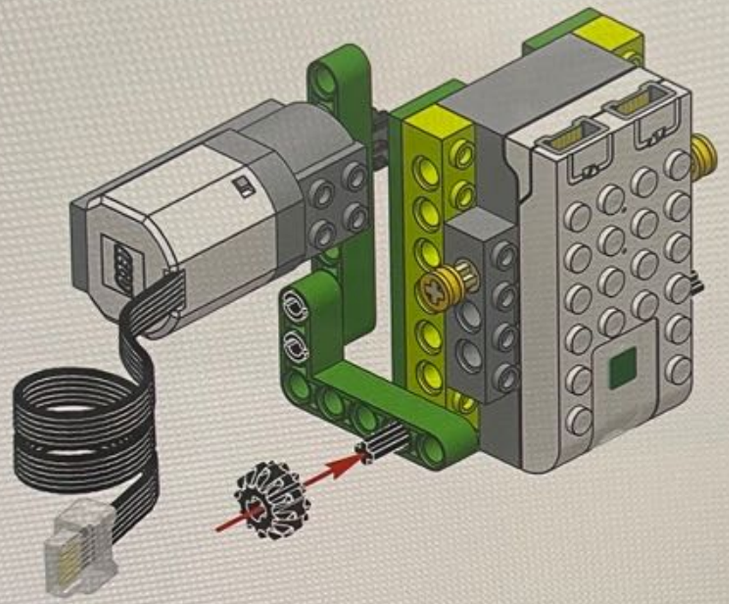

26/43

0

50

File Lesson Window Language

ROBORISE-IT!
ROBOTIC EDUCATION

27

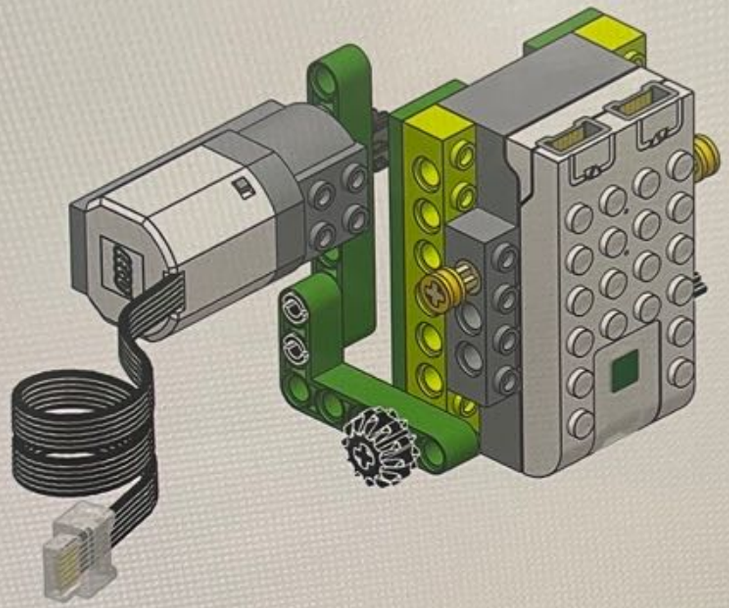

27/43

0

51

ROBORISE-IT!
ROBOTIC EDUCATION

1

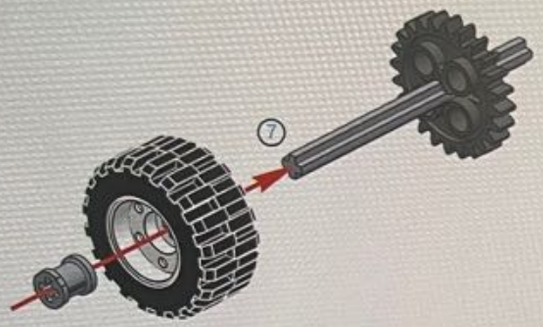

2

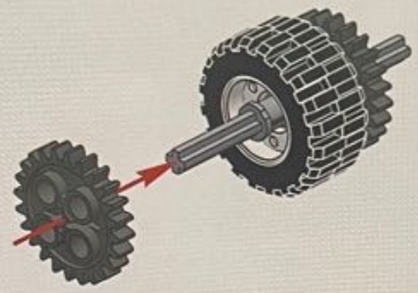

3

28/43

0

52

File Lesson Window Language

ROBORISE-IT!
ROBOTIC EDUCATION

29

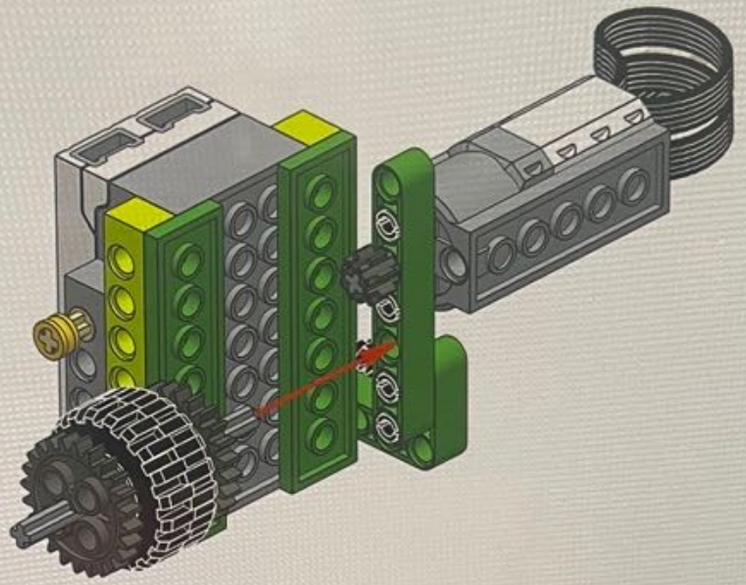

29/43

0

53

SAMSUNG

File Lesson Window Language

ROBORISE-IT!
ROBOTIC EDUCATION

30

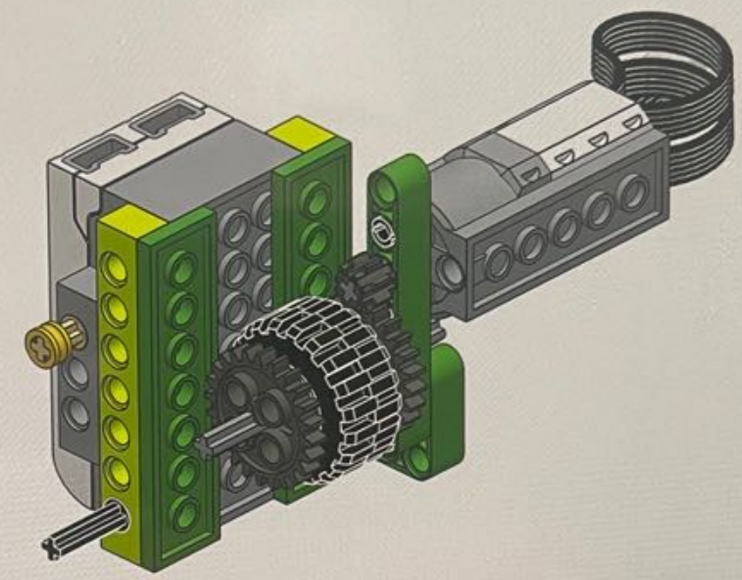

30/43

0

54

ROBORISE-IT!
ROBOTIC EDUCATION

2x

1x

1x

1

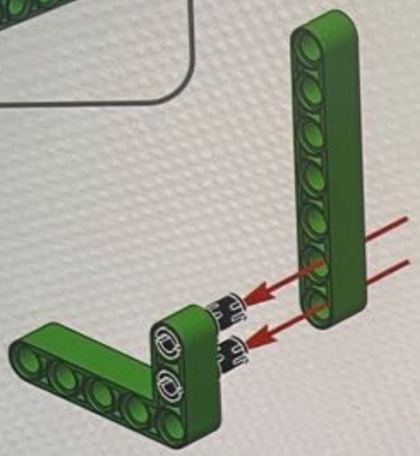

2

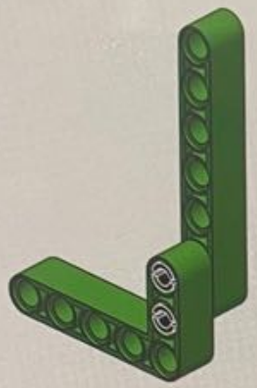

31/43

0

55

SAMSUNG

File Lesson Window Language

ROBORISE-IT!
ROBOTIC EDUCATION

32

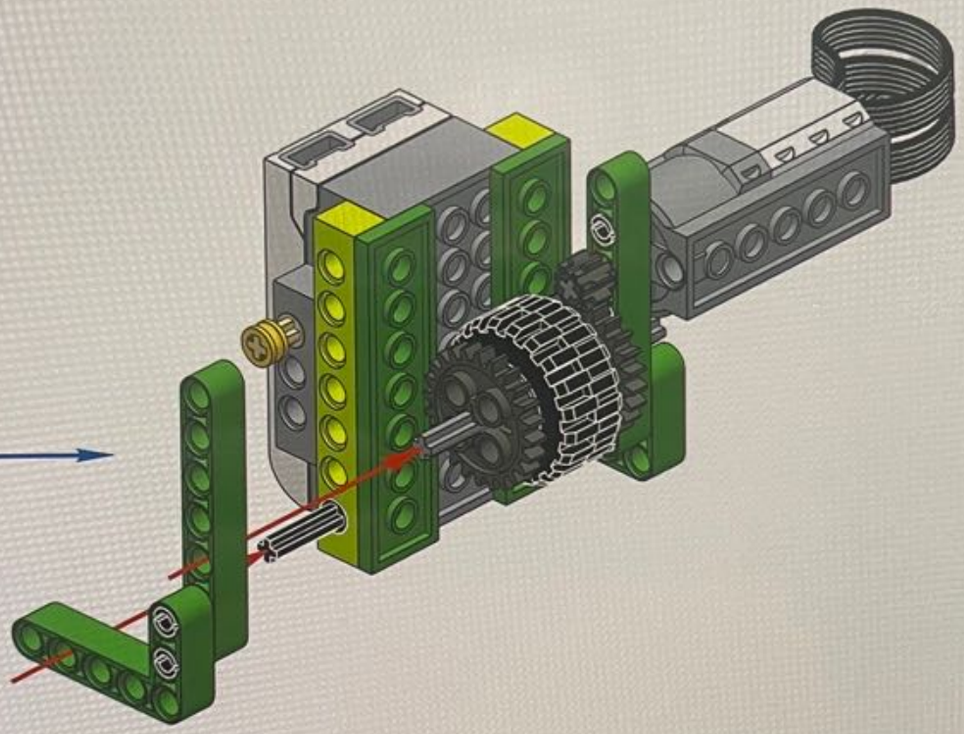

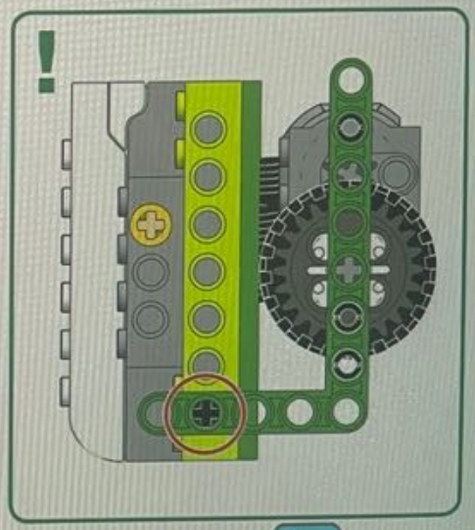

32/43

0

56

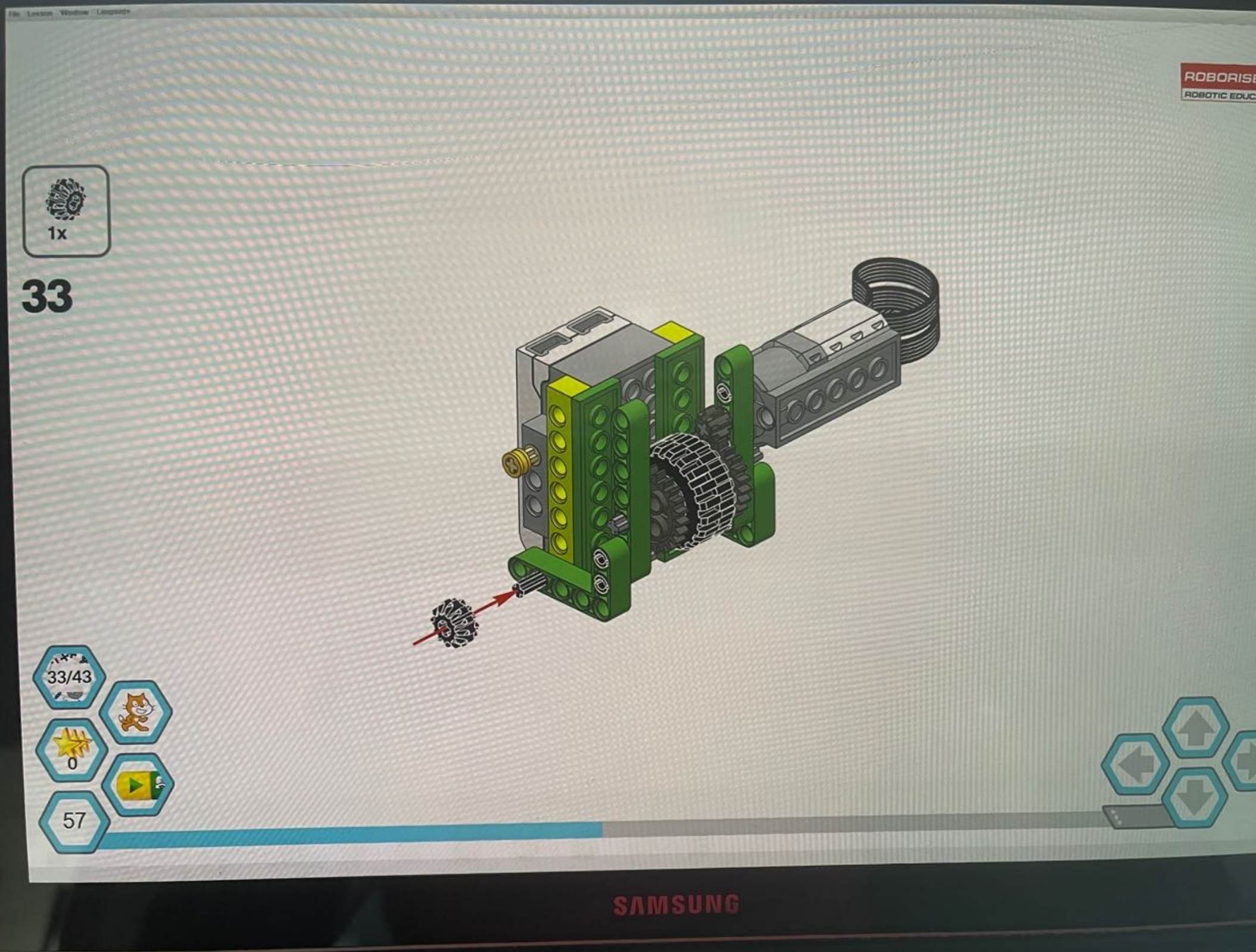
File Lesson Window Language
ROBORISE-IT
ROBOTIC EDUCATION
1x
33
33/43
0
57

SAMSUNG

File Lesson Window Language

ROBORISE-IT
ROBOTIC EDUCATION

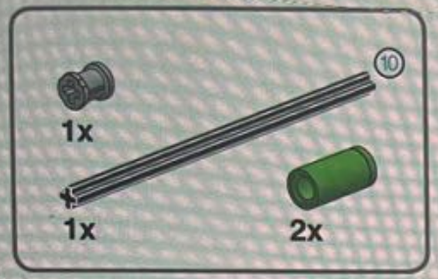

34

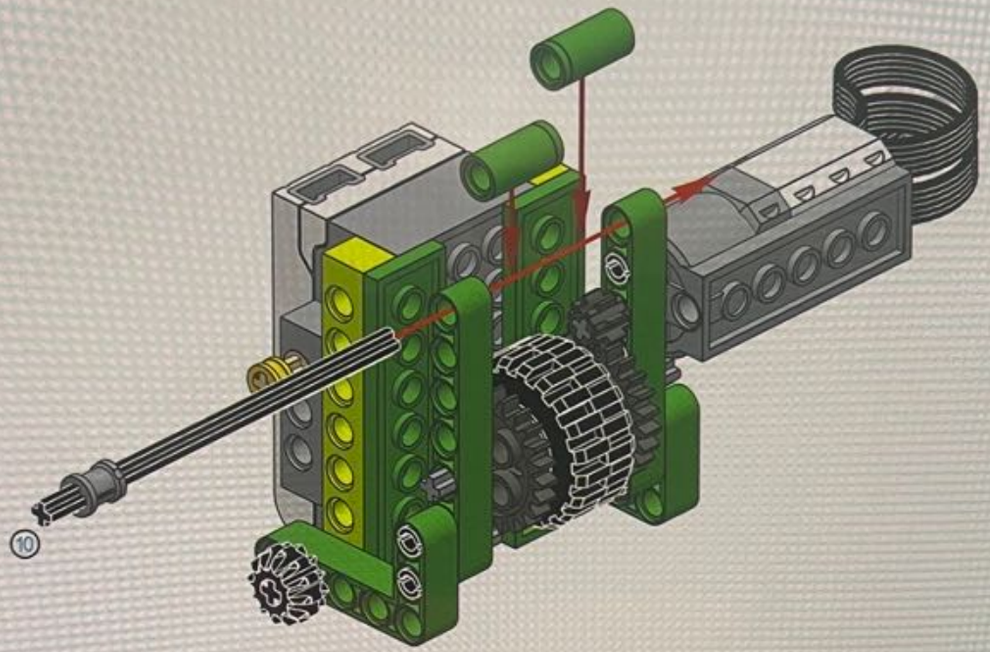

34/43

0

58

SAMSUNG

File Lesson Window Language

ROBORISE
ROBOTIC EDUCA

1x

35

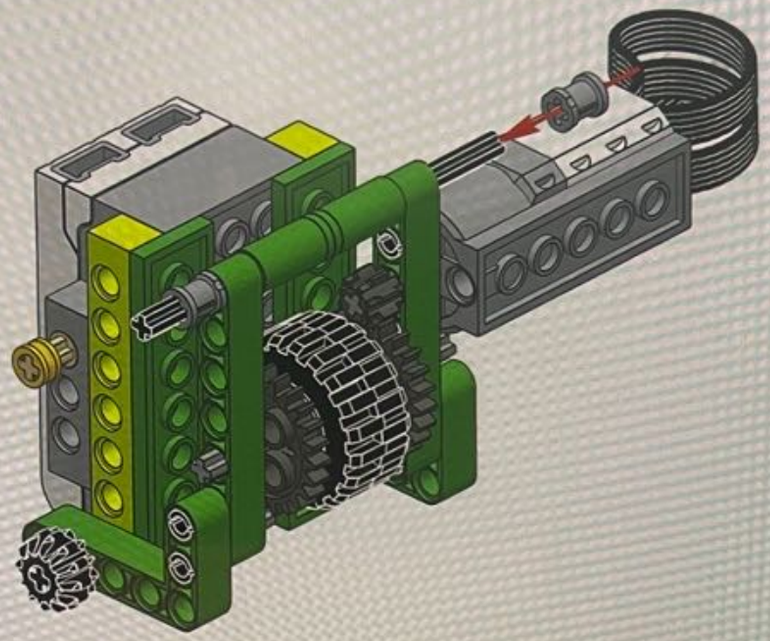

35/43

0

59

SAMSUNG

File Lesson Window Language

ROBORISE-IT!
ROBOTIC EDUCATION

2x

36

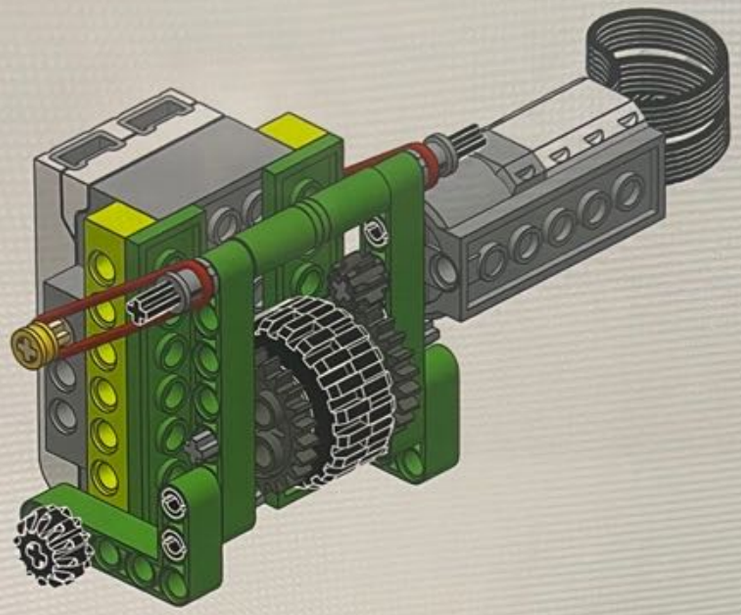

36/43

0

60

SAMSUNG

ROBORISE-IT!
ROBOTIC EDUCATION

37

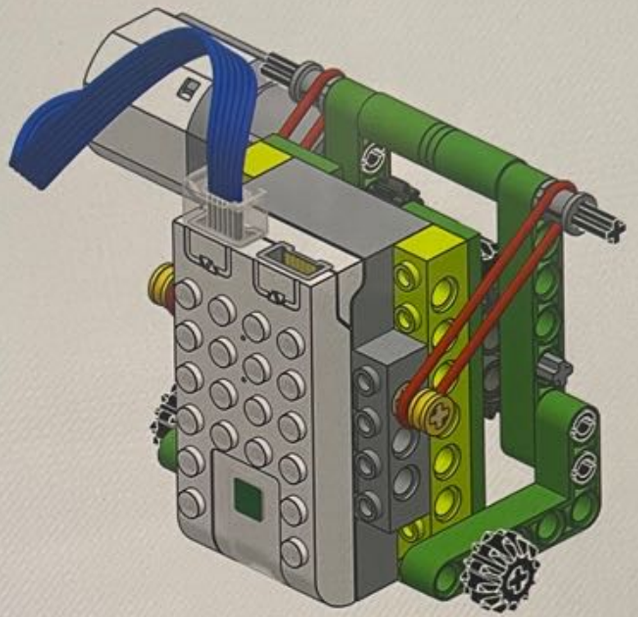

SAMSUNG

File Lesson Window Language

ROBORISE-IT!
ROBOTIC EDUCATION

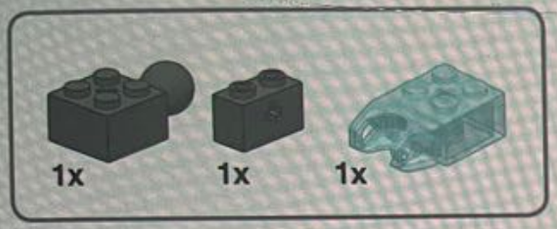

38

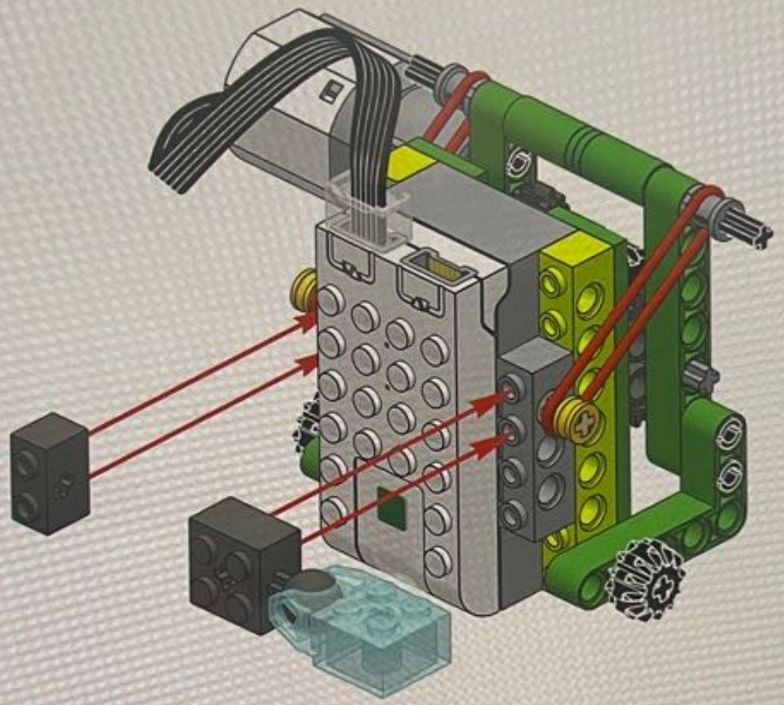

SAMSUNG

File Lesson Window Language

ROBORISE-IT!
ROBOTIC EDUCATION

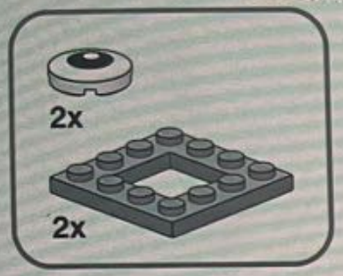

39

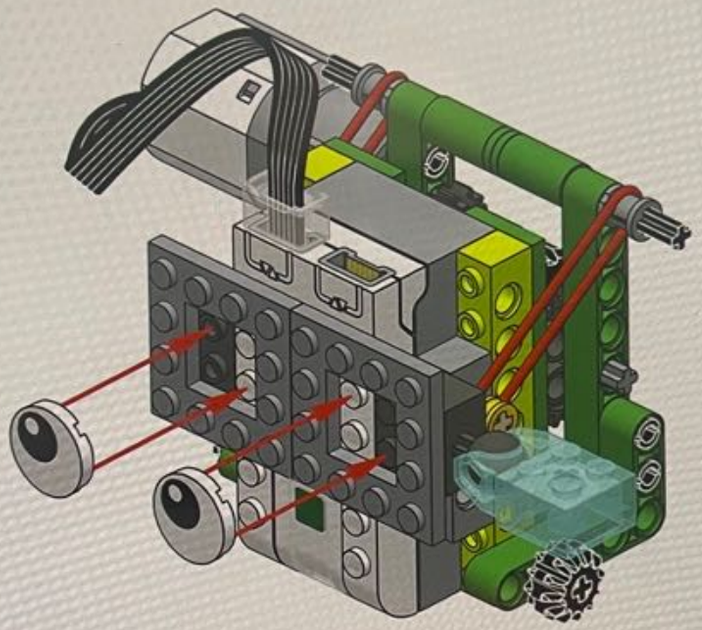

SAMSUNG

File Lesson Window Language

ROBORISE
ROBOTIC EDUCA

40

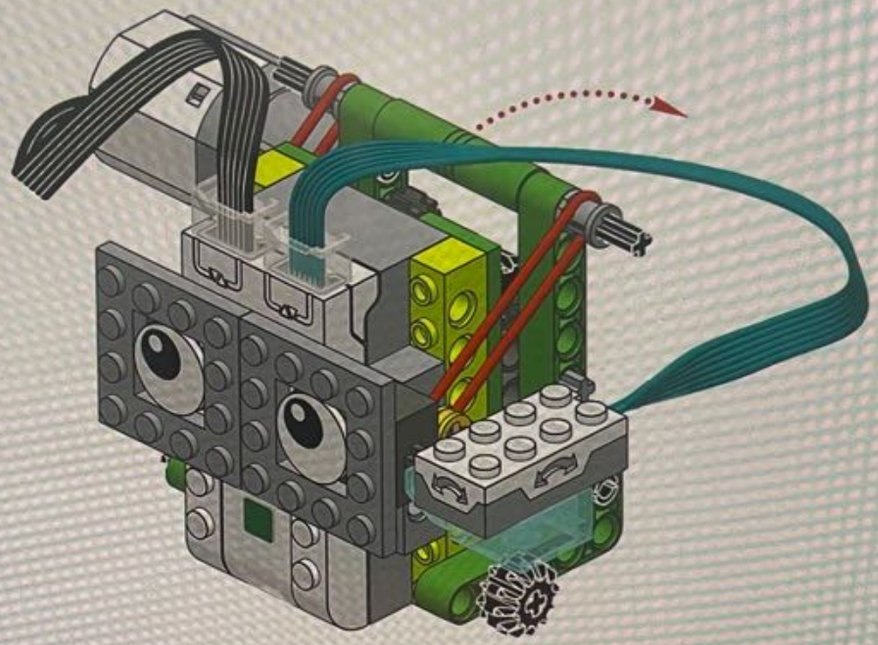

40/43

0

64

SAMSUNG

ROBORISE-IT!
ROBOTIC EDUCATION

41

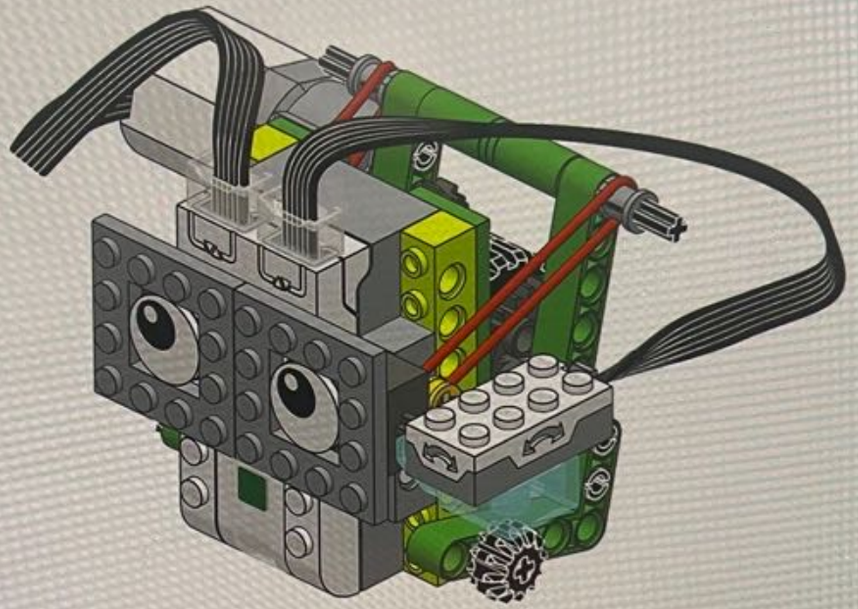

SAMSUNG

File Lesson Window Language

ROBORISE-IT!
ROBOTIC EDUCATION

42

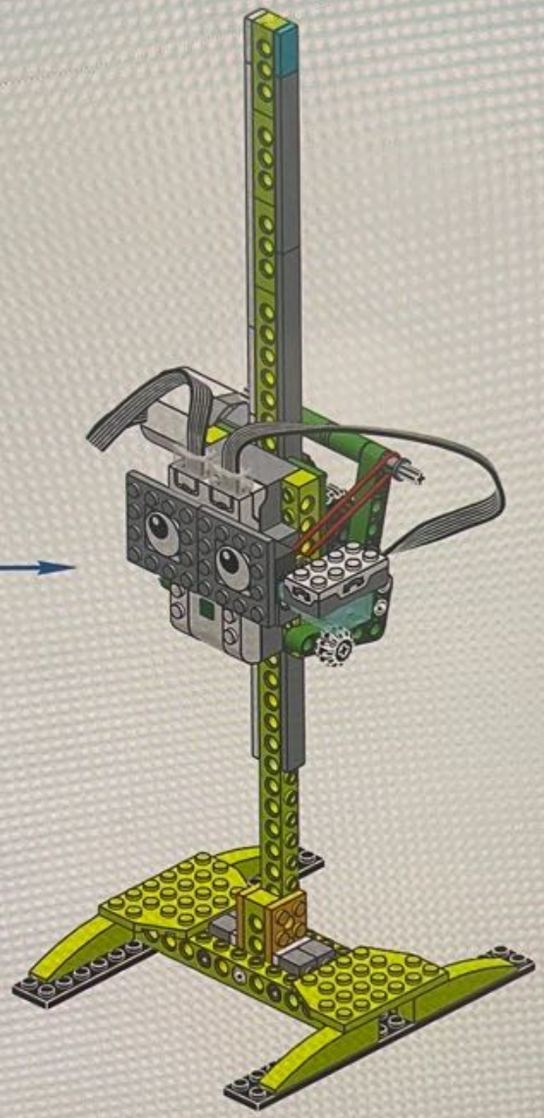

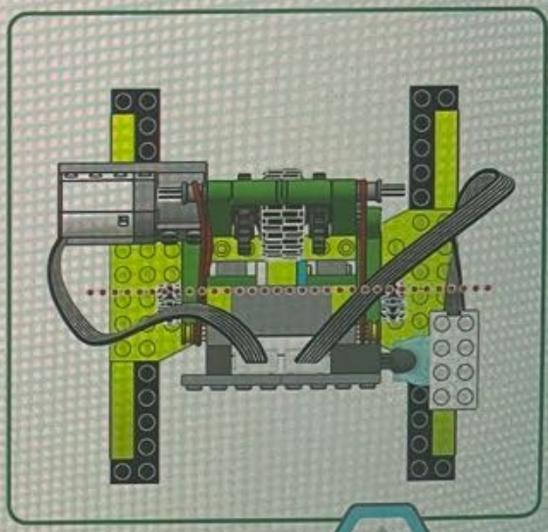

42/43

0

66

SAMSUNG

File Lesson Window Language

ROBORISE-IT!
ROBOTIC EDUCATION

1x

43

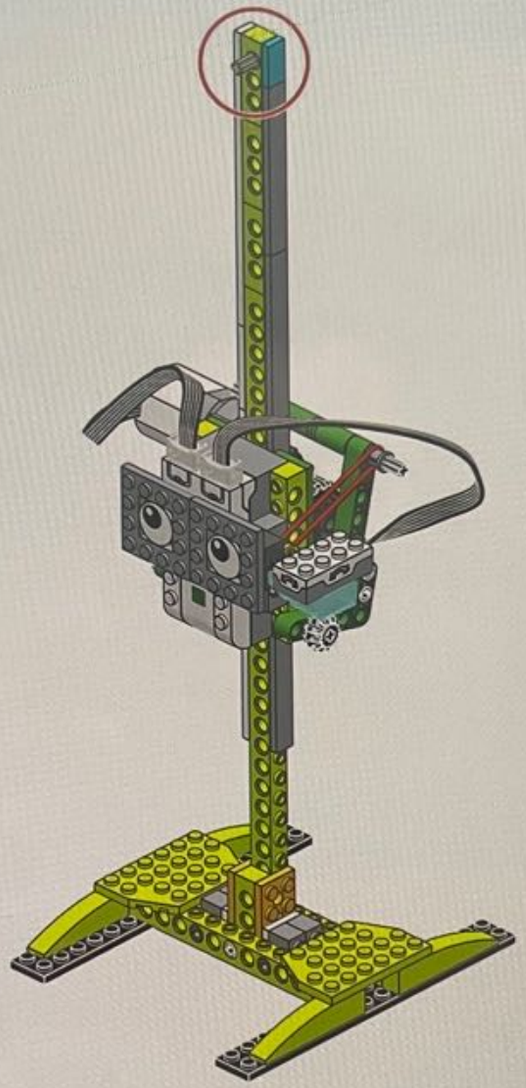

43/43

0

67

SAMSUNG

ROBORISE-IT!
ROBOTIC EDUCATION

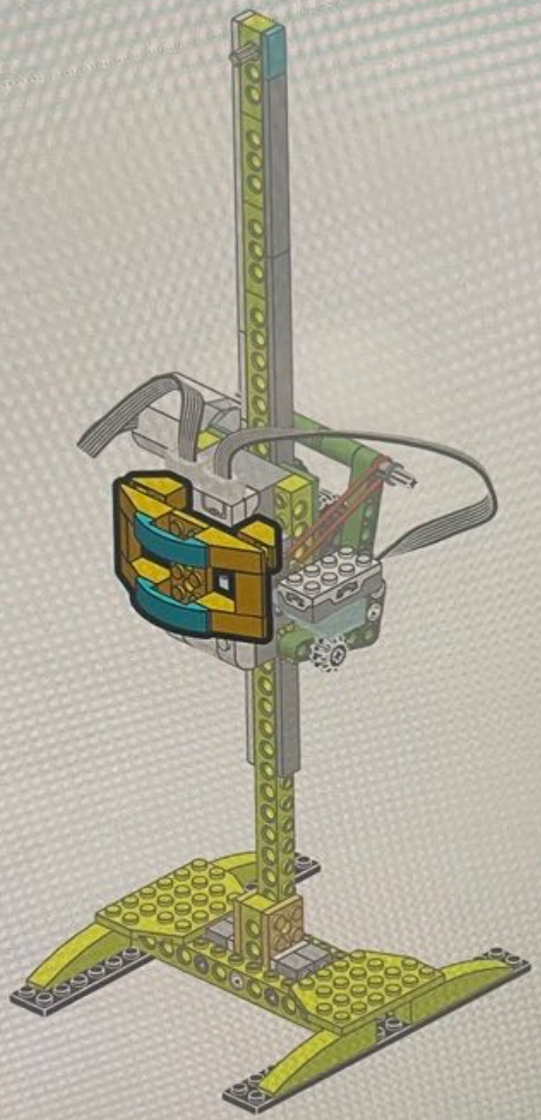

1/8

0

69

SAMSUNG

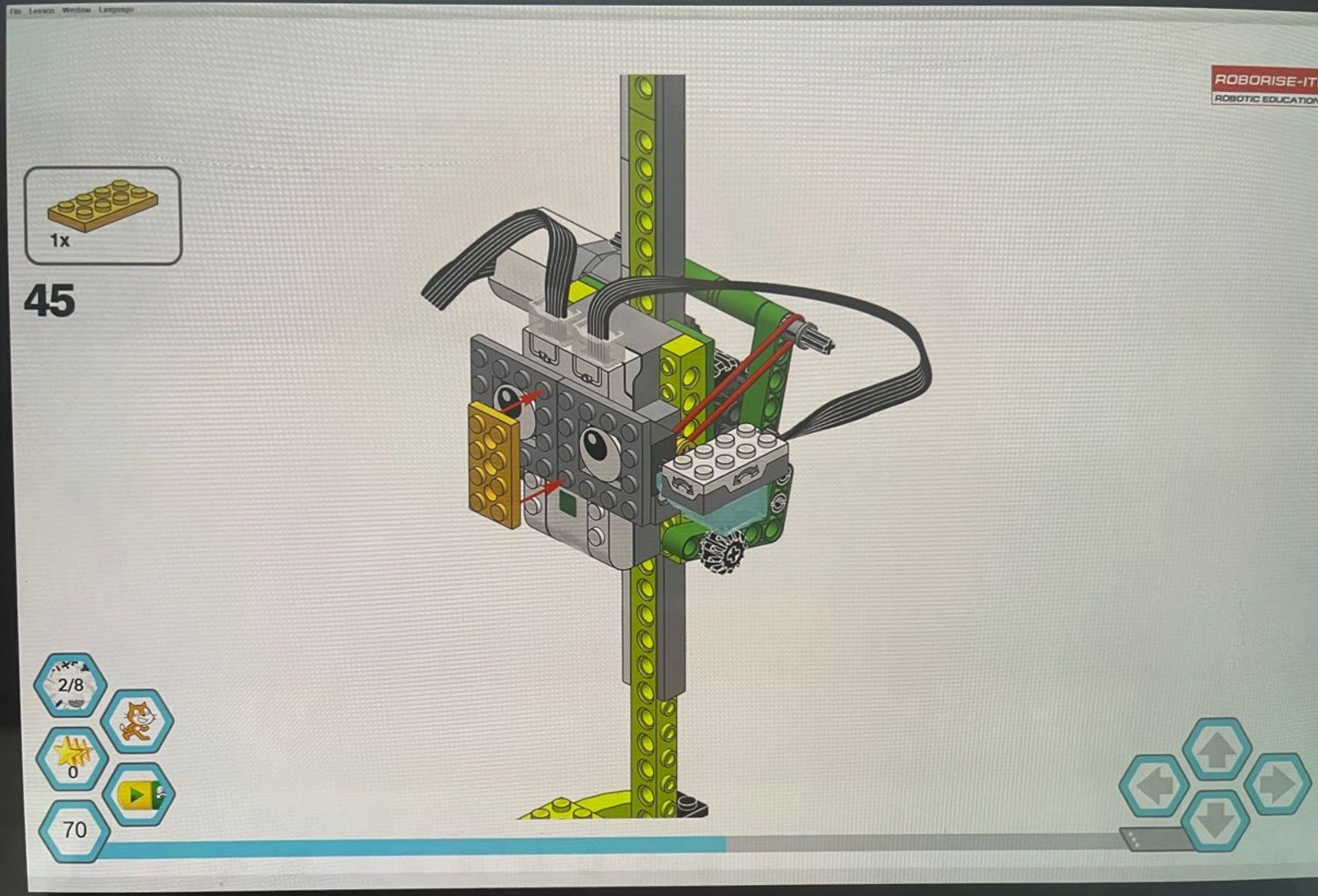
ROBORISE-IT!
ROBOTIC EDUCATION
1x
45
2/8
0
70

File Lesson Window Language

ROBORISE-IT!
ROBOTIC EDUCATION

46

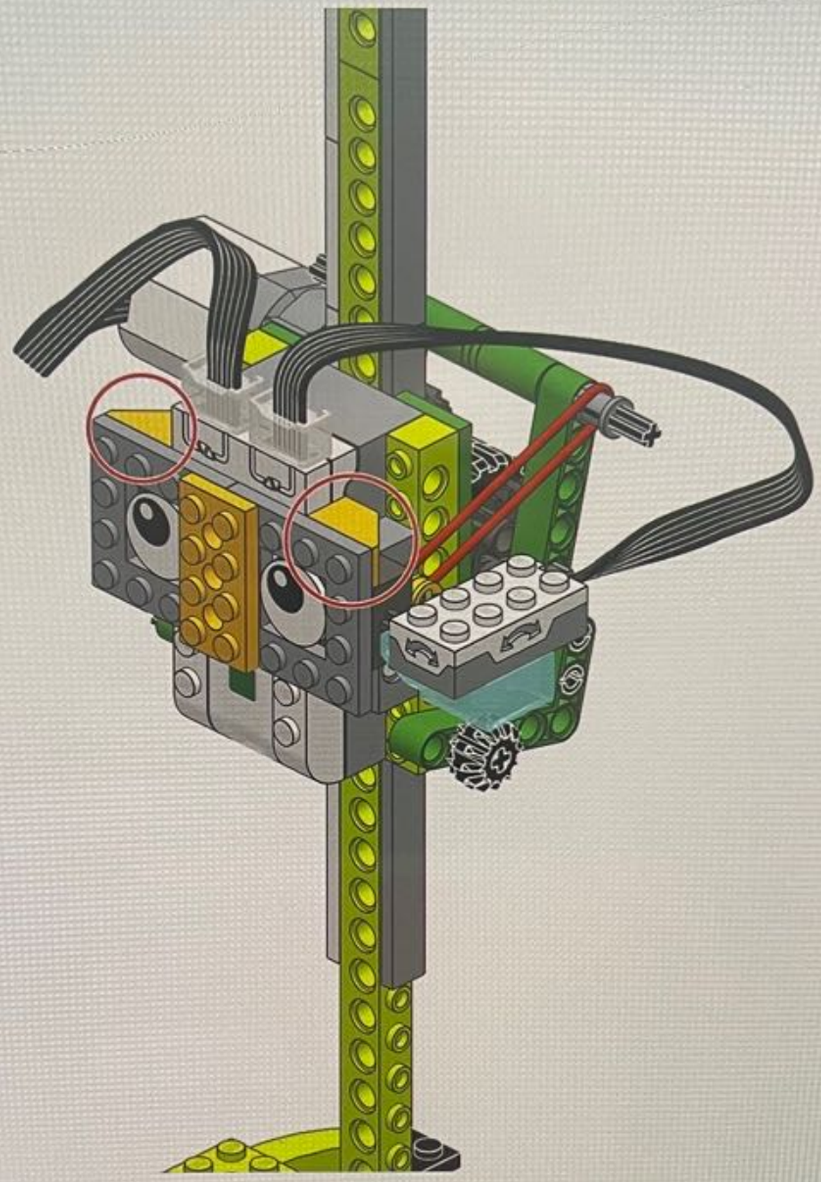

SAMSUNG

File Lesson Window Language

ROBORISE-IT!
ROBOTIC EDUCATION

2x

47

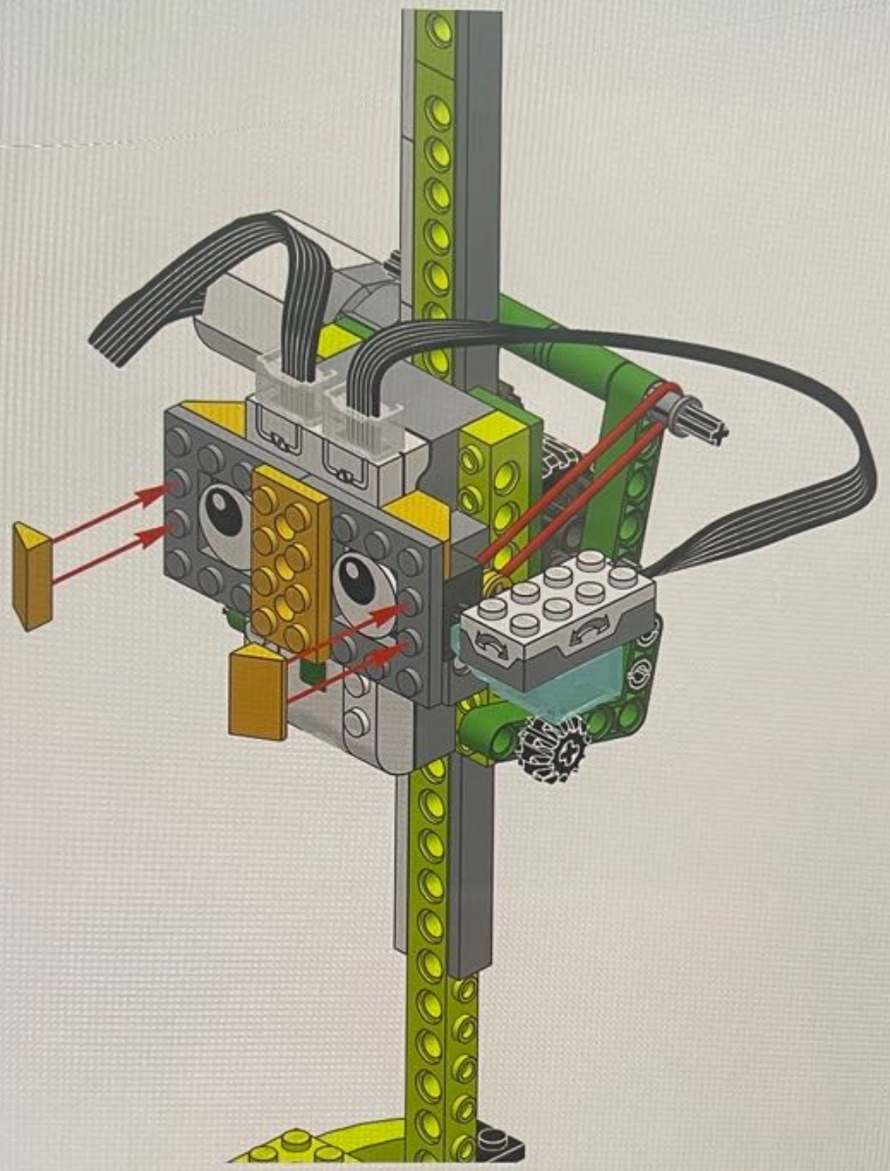

4/8

0

72

ROBORISE-IT!
ROBOTIC EDUCATION

48

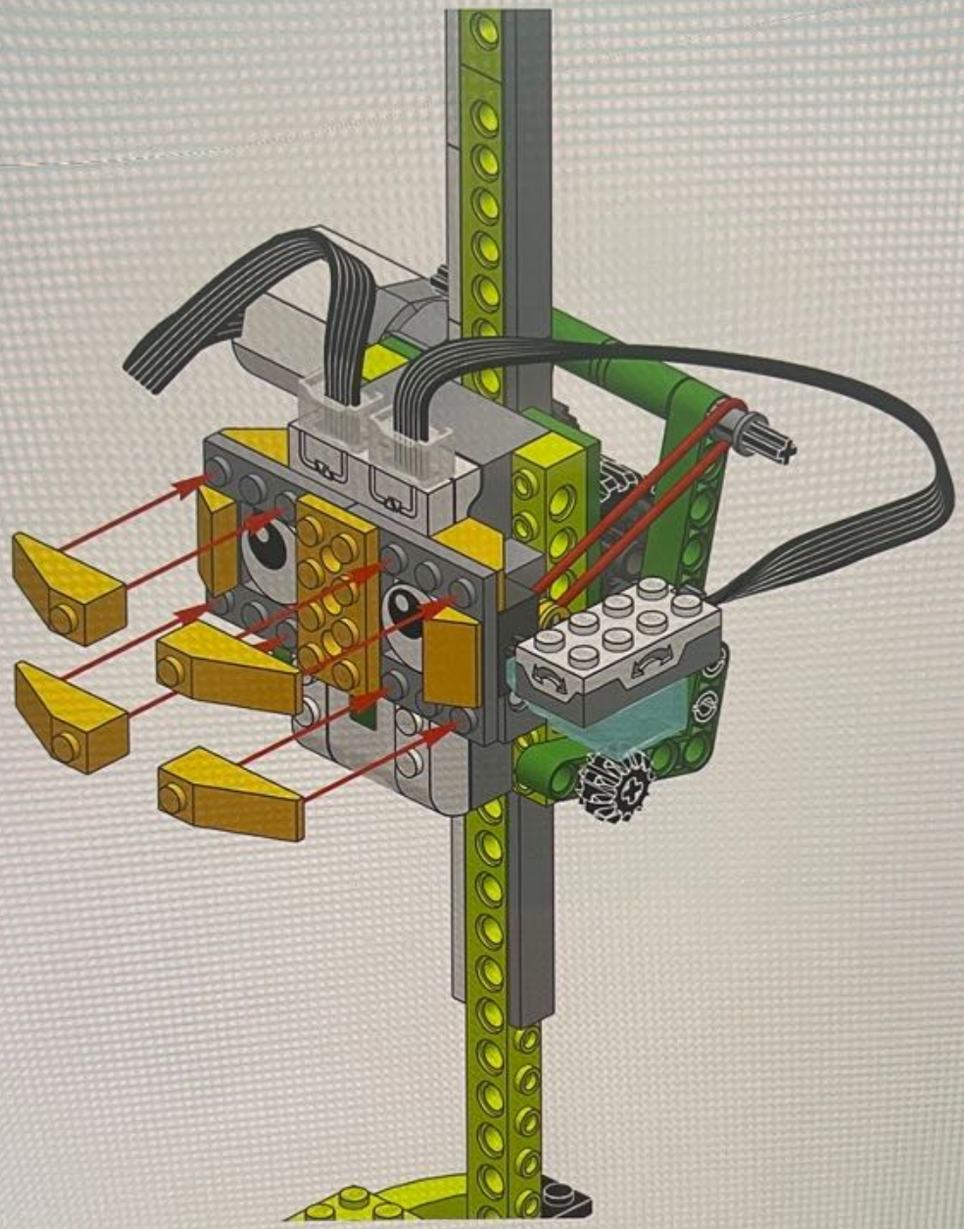

File Lesson Window Language

ROBORISE-I
ROBOTIC EDUCATIO

2x

49

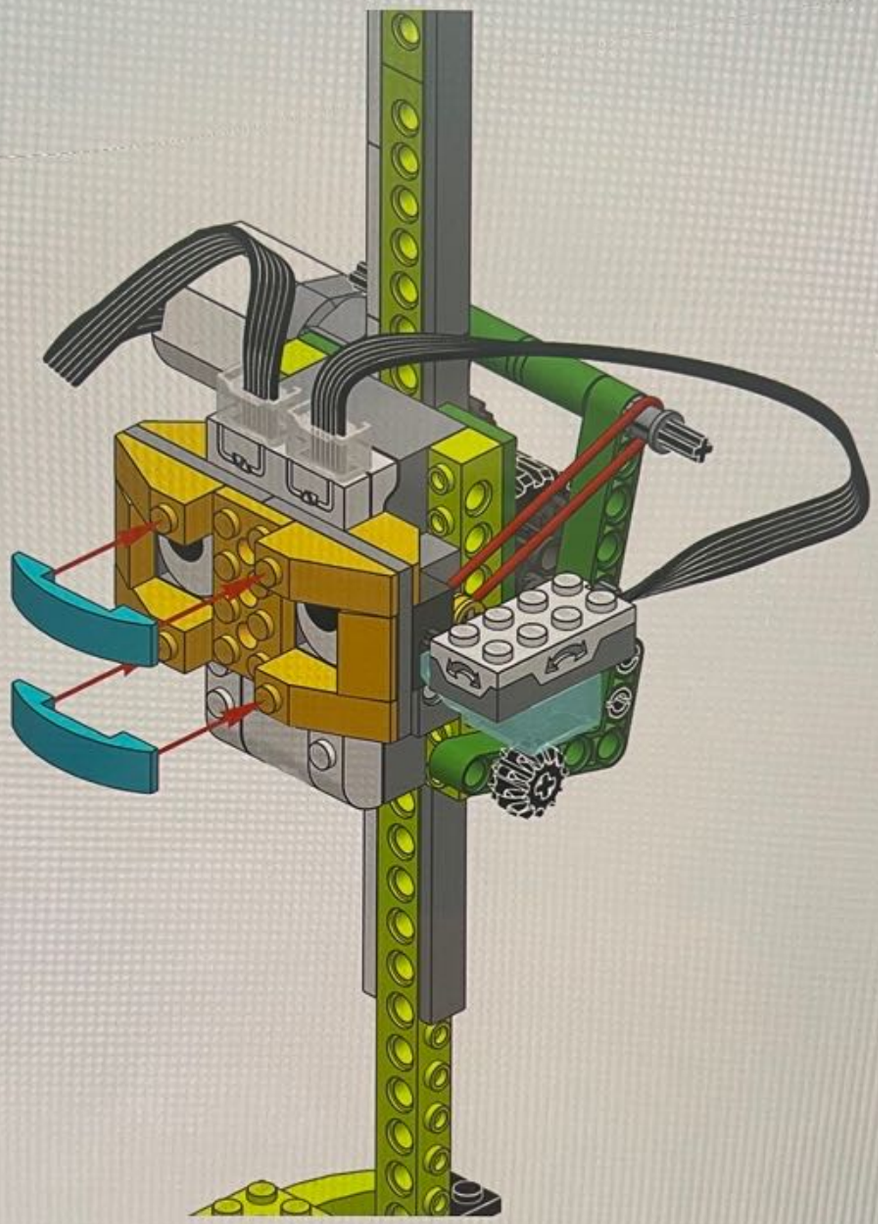

6/8

0

74

ROBORISE-IT!
ROBOTIC EDUCATION

50

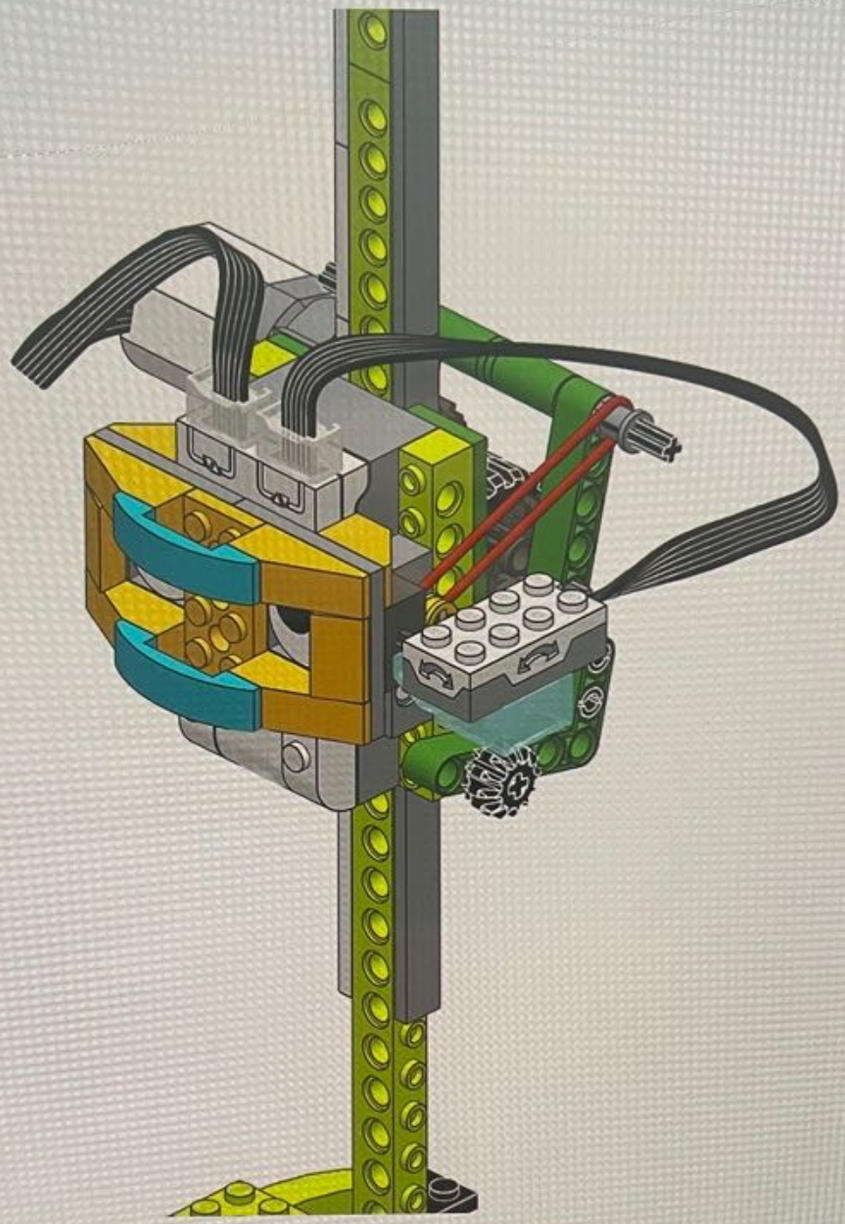

7/8

0

75

SAMSUNG

ROBORISE-
ROBOTIC EDUCATI

51

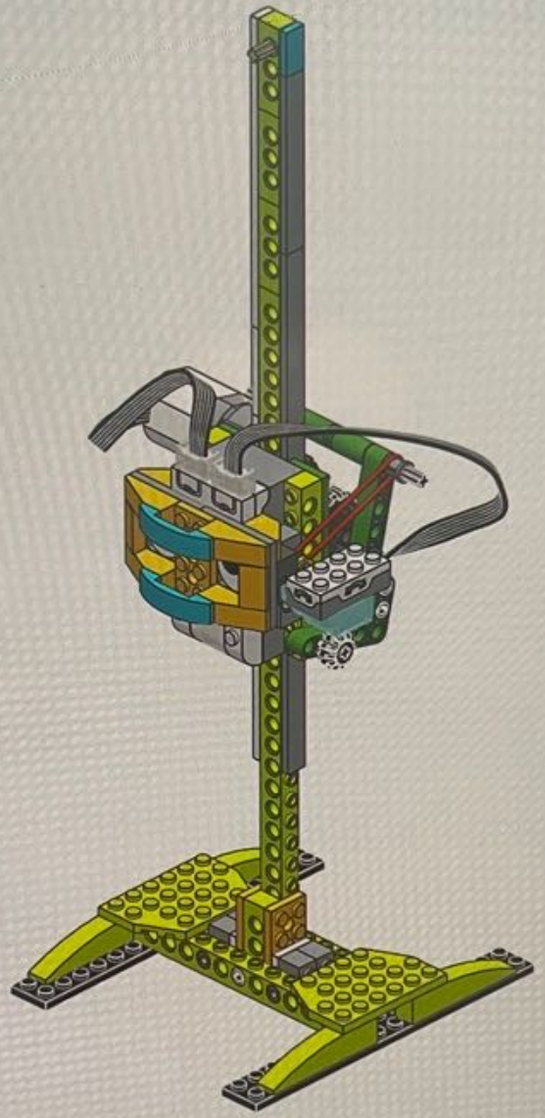

8/8

0

76

SAMSUNG

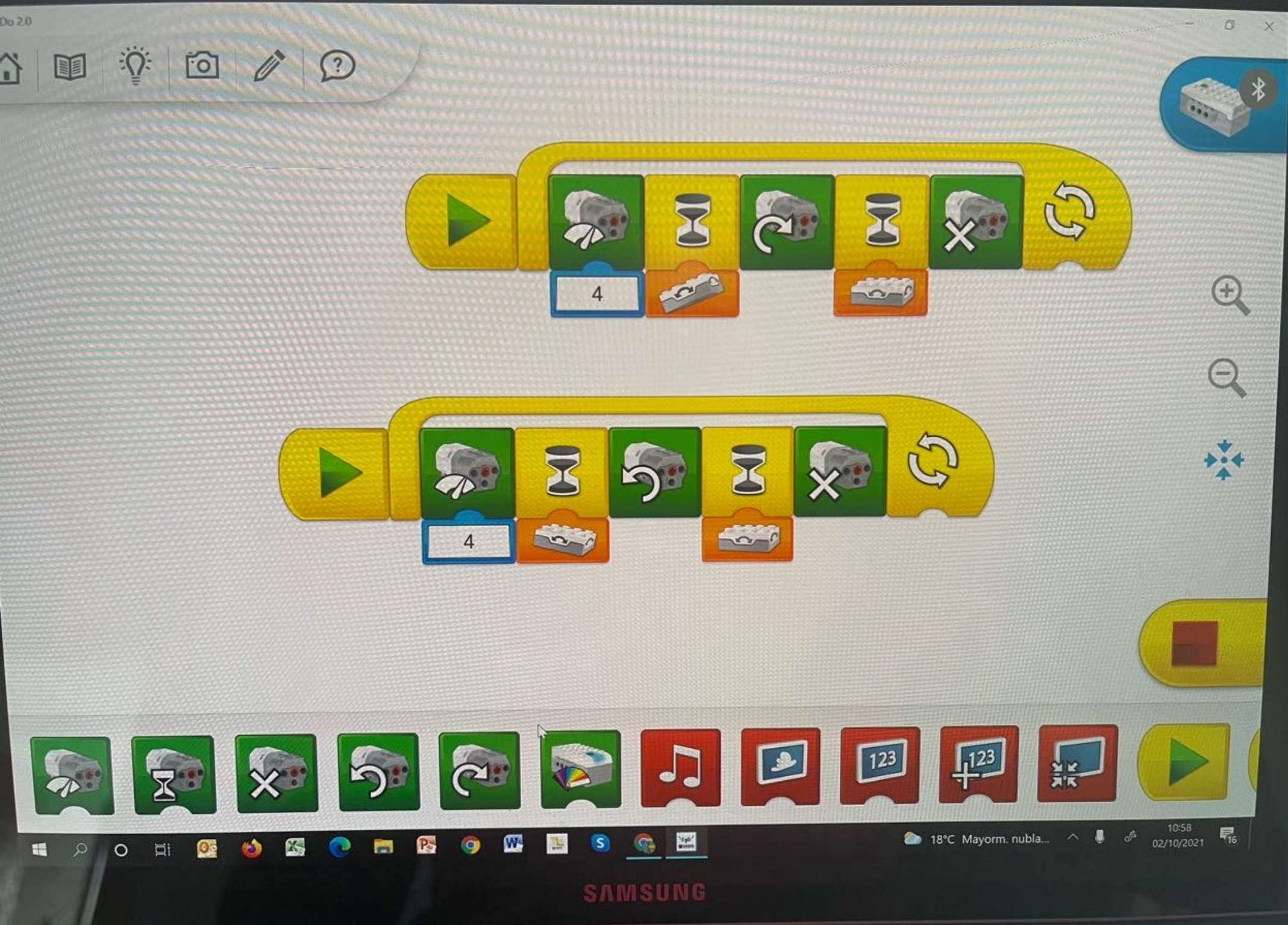
Do 2.0
4
4
123
123
18°C Mayorm. nubla...
10:58
02/10/2021
SAMSUNG